User Manual

GFK-3067

May 2019

RXi – Web Panel

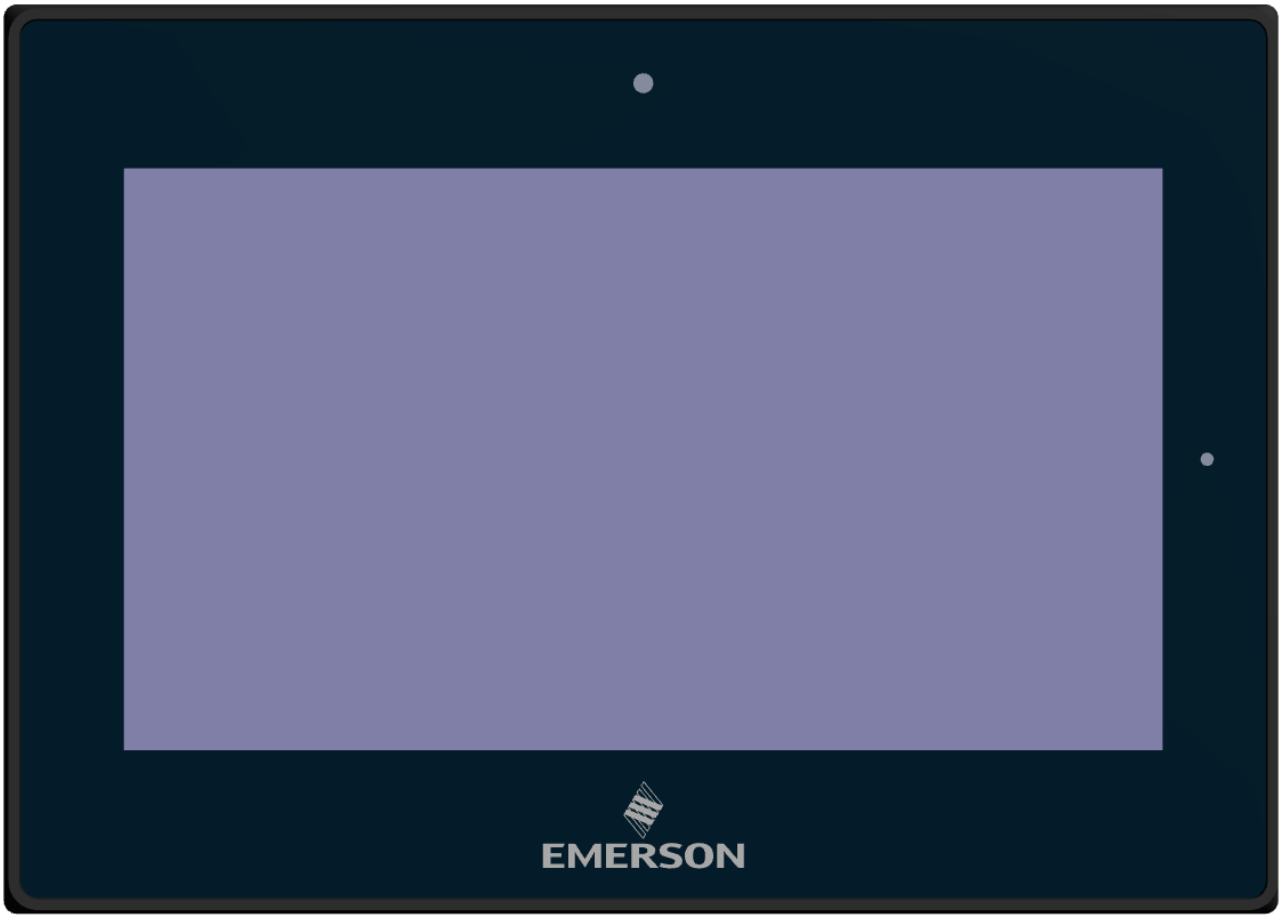

EMERSON

Contents

Section 1: Getting Started

1.1 Features

Primary technical features:

- Industrial Web Panel
- Flat front panel touch screen
- IP66 compliant front panel
- Fanless design
- 24V DC power input
- System Power LED light
- Auto Dimming Function

1.2 Specifications

	Display Size	7"	10"	12"	15"	19"	24"
Display	Resolution	1024 x 600 WSVGA	1280 x 800 WXGA		1920 x 1080 Full HD		
	Format	Widescreen (16:10)			Widescreen (16:9)		
	Orientation	Landscape					
	Reading Angle (°)	150 (H) / 145 (V)	170 (H) / 170 (V)	176 (H) / 176 (V)	170 (H) / 170 (V)	178 (H) / 178 (V)	
	Display Off-Color	Black					
	Contrast	800:1		1000:1	800:1	1000:1	5000:1
	Brightness (cd/m2)	500 (1000 with Outdoor SLR Screen)		400 (1000 with Outdoor SLR Screen)	450 (1000 with Outdoor SLR Screen)	350	300
	MTBF Backlighting	50 000 h (at 25°C)					
	Backlight	LED, Dimmable via Software					
Processor i.MX 6DualLite	Processor	Freescale i.MX 6DualLite					
	# of cores/TDP	2 core/2.5W					
	CPU frequency	1.0Ghz					
Memory	Capacity	2GB DDR3L					
Storage	Internal	4GB eMMC NAND Flash Memory					
Watchdog Timer	Setup	Setup by software					
Operating Control	Method	Touch					
Touchscreen	Technology	Projected Capacitive Touch (PCT/PCAP)					
	Touch Sensor	Multi-touch (Ten-Point)					
Interfaces	Port 1	1 x 10/100/1000 Base T Ethernet RJ45					
	Port 2	1 x RS-232/422/485 COM Port (DB-9 connector)					
	Port 3	1 x USB 2.0 (Type-A) 1 x USB OTG (micro USB)					
Status Indicators	Front Bezel Tri-color LED	Amber/Green/Red					
	On-board Buzzer	Yes (85dB sound level with 80mA mean current)					
Power-Supply	Voltage [V]	+24VDC ±20% (19.2 V to 28.8 V, 3-Pin Connector)					
Protection-Class	Front-Side	IP66 (When Installed to a Wall/Panel)					
	Back-Side	IP20					
Operating System	OS	Linux kernel 4.1.15:Yocto					
	Framework	Qt 5.6.2					
Software Tools	Tool 1	Qt WebKit / Web Browser					
	Tool 2	HTML5 Capability					

	Display Size	7"	10"	12"	15"	19"	24"
Secure & Trusted Boot	**Item 1**	CAAM					
Design	**Housing**	Aluminum Die Casting (Front)					
	Construction Type	Modular (Detachable Modules; Computer, Monitor, Touch Display, DIO)					
	Cooling	Natural Convection (Fanless Passive Cooling)					
Environment	**Operating Temperature**	-20°C to +65°C					
	Storage Temperature	-30°C to +70°C					
	Operating Humidity	85% RH (non- condensing) @ 30°C					
	Operating Altitude	10000 f t. (3.000 m)					
	Vibration	1Grms / 5 ~ 500Hz (Random) / Operation IEC 60068-2-64 10G peak acceleration (11 msec. duration)/operation IEC 60068-2-27					
Compliance	**Certifications**	UL and cUL 62368, UL and cUL 61010, IECEE CB Scheme					
		UL TYPE 4 & 4X, IP66 (ANSI/IEC 60529)					
		CE (EN 62368, EN 61000-6-4, 61000-6-2)					
		FCC Part15 Class A					
		RoHS					
	Certifications Coming Q4 2019	UL Listed US/CAN Hazardous Locations: Class 1 Division 2, Class 2 Division 2, Class 3 Division 1					
		ATEX Zone 2/22 & IECEX					
		BIS					
		Marine; DNV, ABS, BV, LR					
Mounting	**Panel Cutout Dimensions (W x H)**	183.5 x 128.5 mm	255.5 x 174 mm	317 x 214.5 mm	398 x 245.5 mm	482 x 297 mm	581 x 360 mm
	VESA Mounting	75 x 75		100 x 100			
	Hardware Included	Mounting Clamps and Allen Screws					
Physical Specification	**Net Weight (kg)**	2.0	2.6	3.8	5.1	6.9	9.0
	Dimensions (W x H x D)	192 x 137 x 65 mm	267 x 186.2 x 65 mm	329.1 x 226.8 x 66 mm	410.2 x 257.6 x 65 mm	500 x 315 x 70 mm	600 x 382 x 71 mm

1.3 Technical Drawings & Dimensions

Figure 1.1 Dimensions of 7”

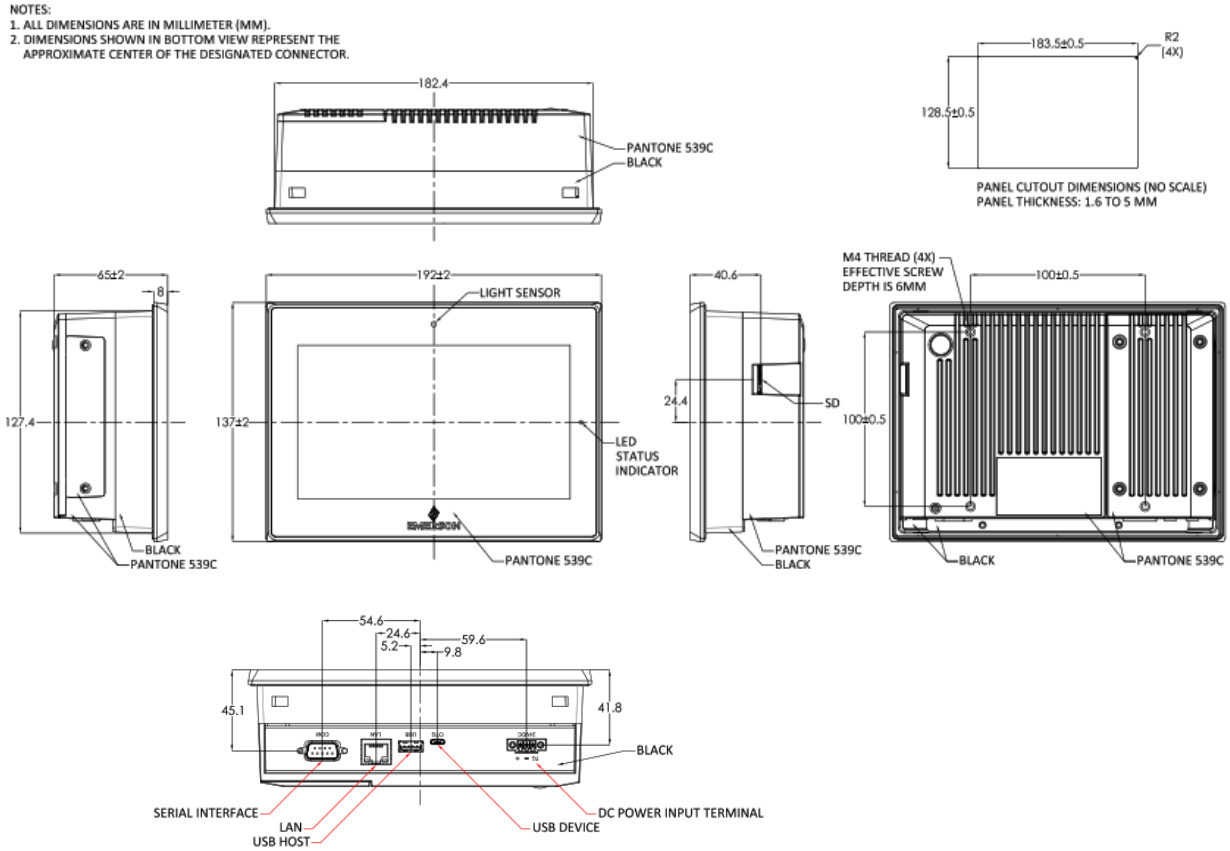

Figure 1.2 Dimensions of 10”

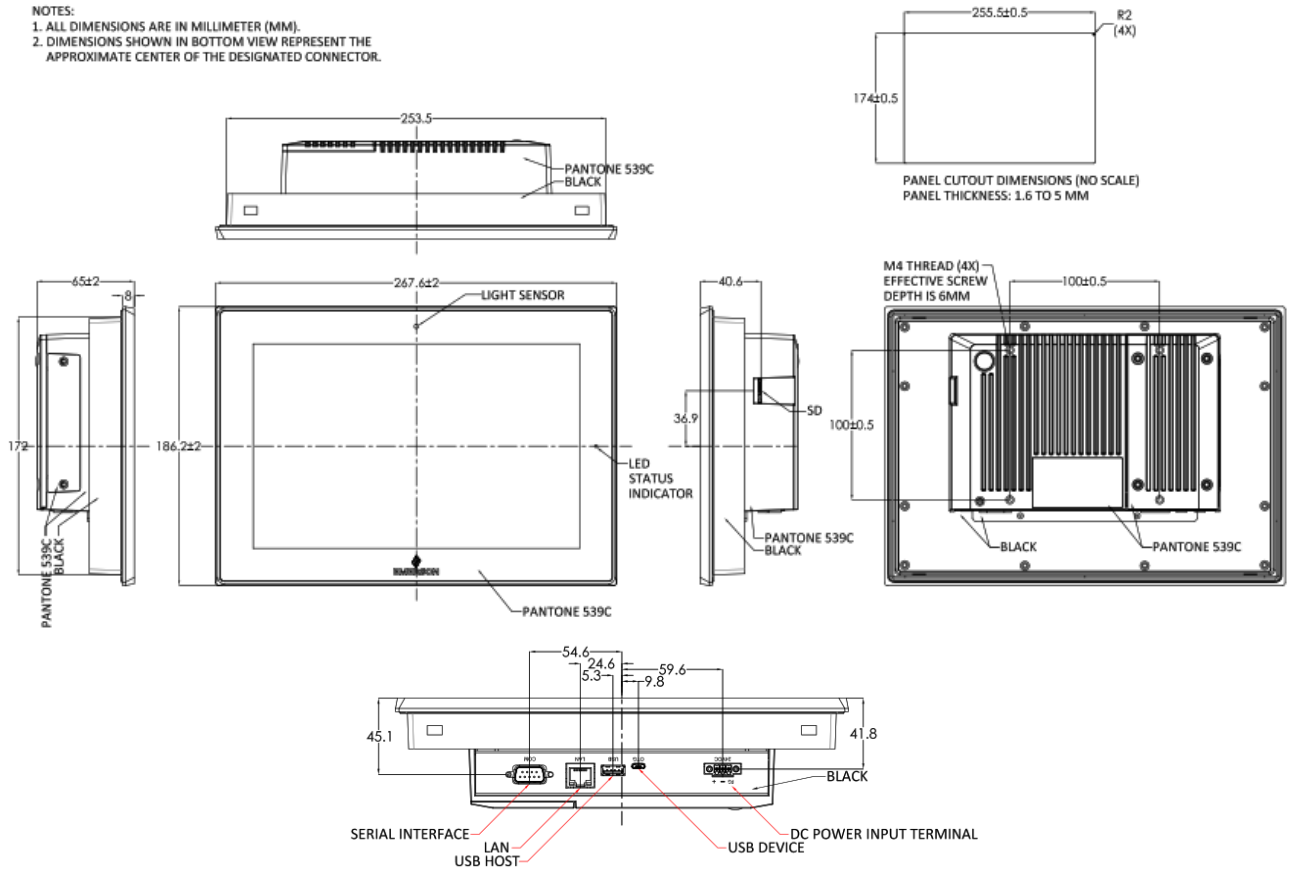

Figure 1.3 Dimensions of 12”

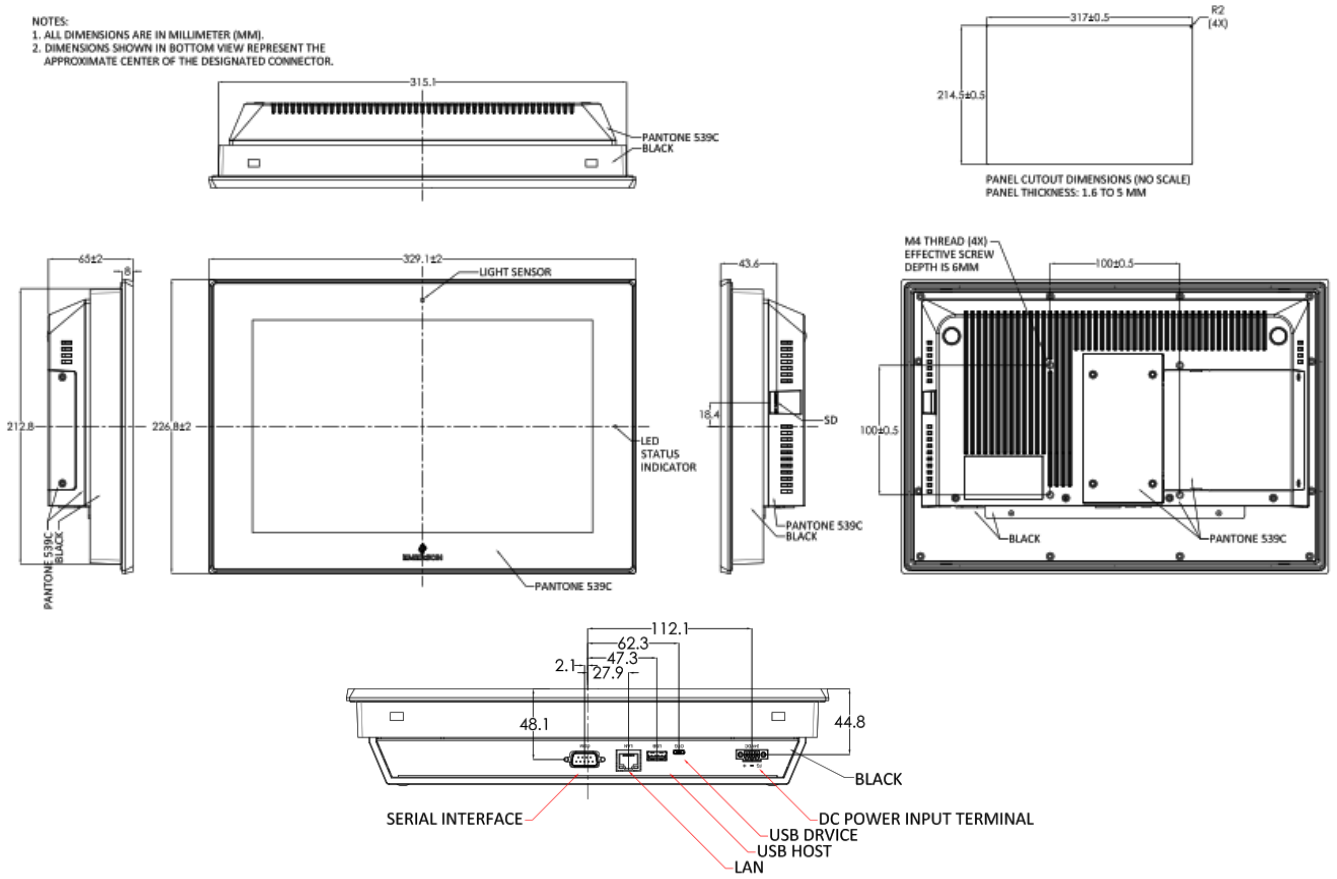

Figure 1.4 Dimensions of 15”

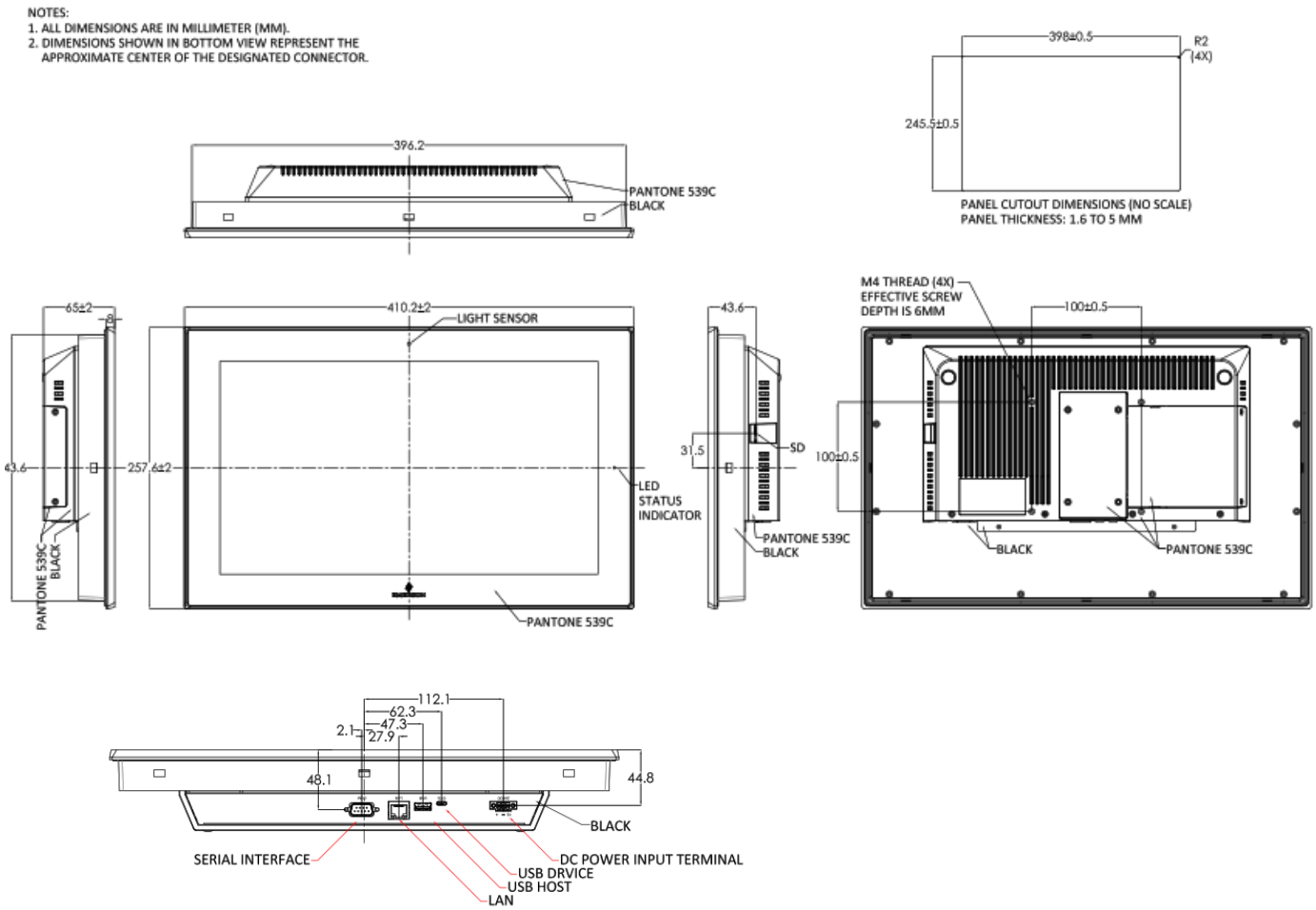

Figure 1.5 Dimensions of 19”

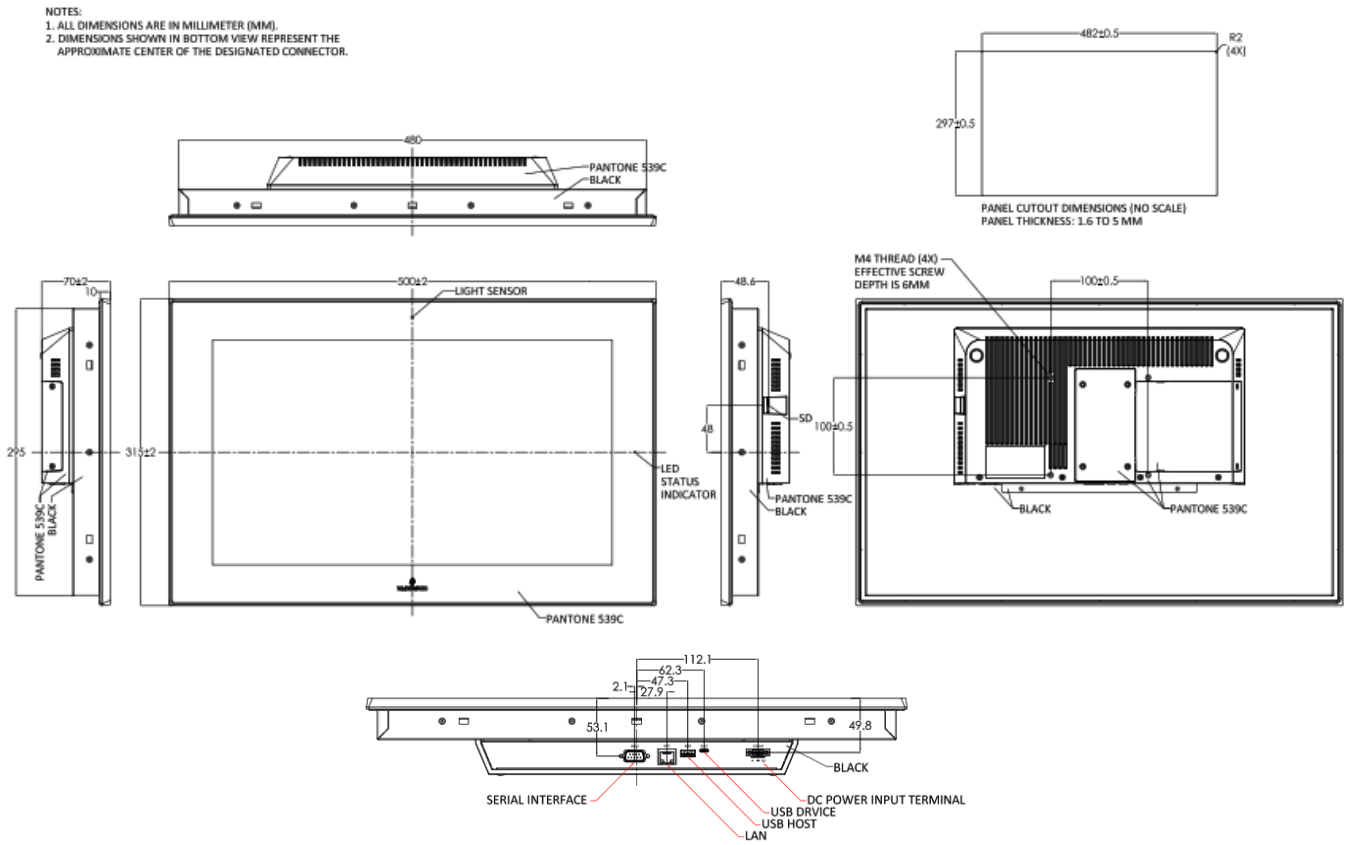

Figure 1.6 Dimensions of 24”

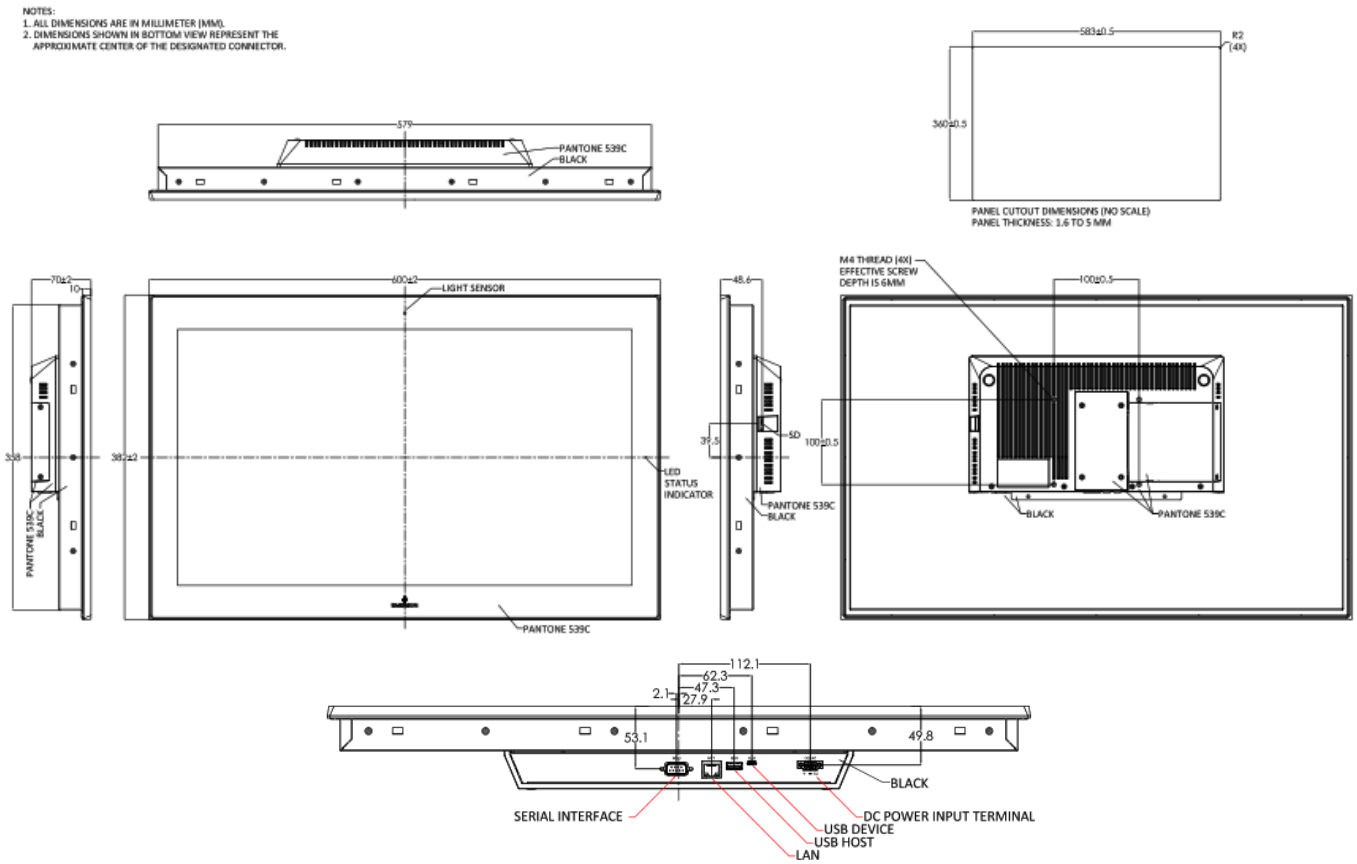

1.4 Brief Description of RXi – Web Panel

The RXi - Web Panel is powered by a Freescale i.MX 6 DualLite 1.0Ghz SoC which is coupled with 2GB of onboard DDR3L memory. The Web Panel series comes in 7”, 10”, 12”, 15”, 19”, and 24” sizes, and feature a high-resolution TFT LCD, 1 x USB 2.0 type A, 1 x USB OTG (micro USB), 1 x RS-232/422/485 COM Port (DB-9 connector)(Default RS-232), 1 x 10/100/1000 Base T Ethernet RJ45 and 1 x 3-pin DC Power input terminal. The models come with a projected capacitive touch screen, and support +24VDC ±20% (19.2 V to 28.8 V, 3-Pin Connector), non-isolated power input.

Figure 1.7 Front View of 7”

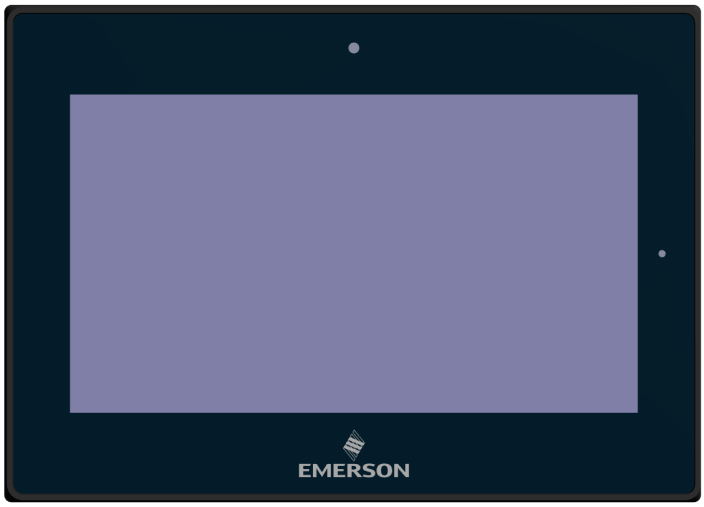

Figure 1.8 Front View of 10”

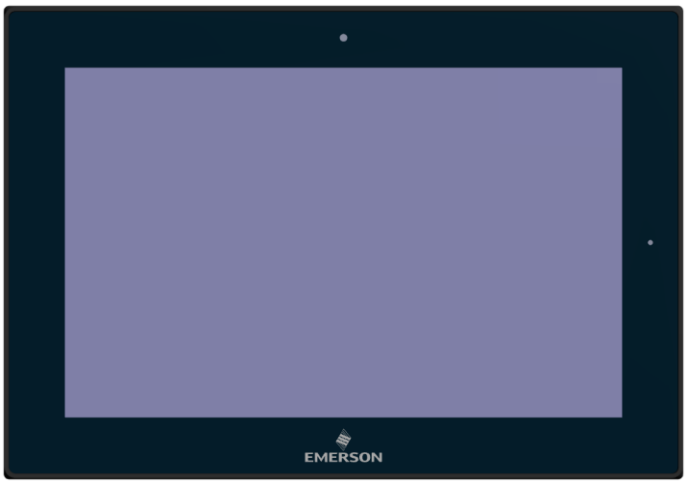

Figure 1.9 Front View of 12”

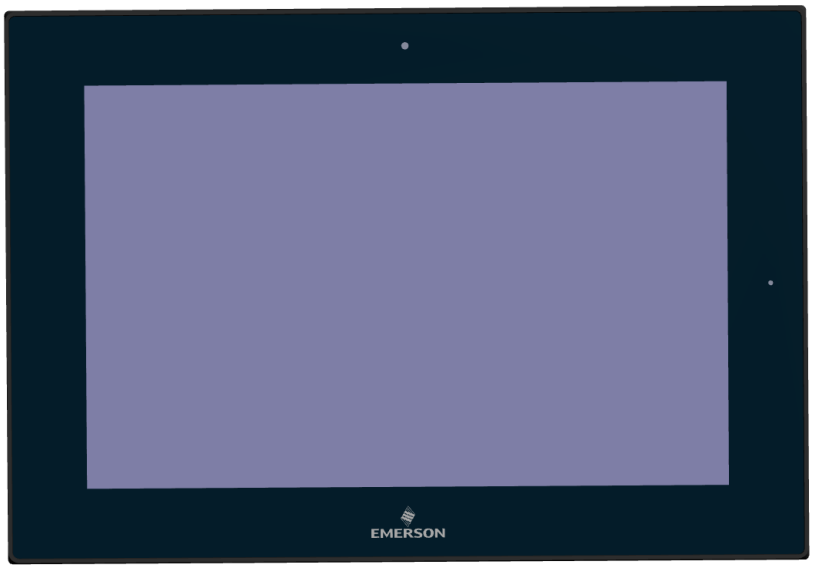

Figure 1.10 Front View of 15”

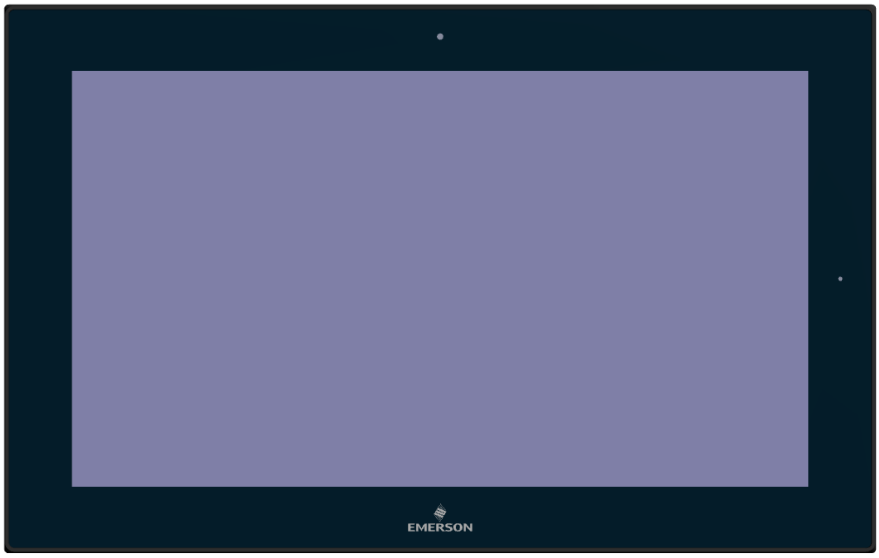

Figure 1.11 Front View of 19”

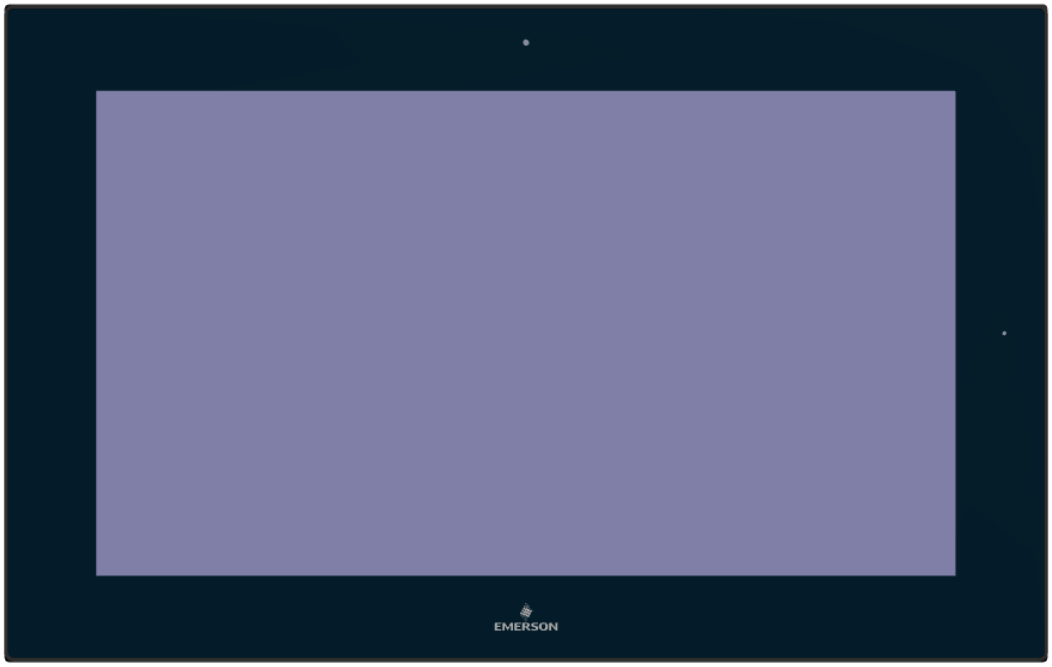

Figure 1.12 Front View of 24”

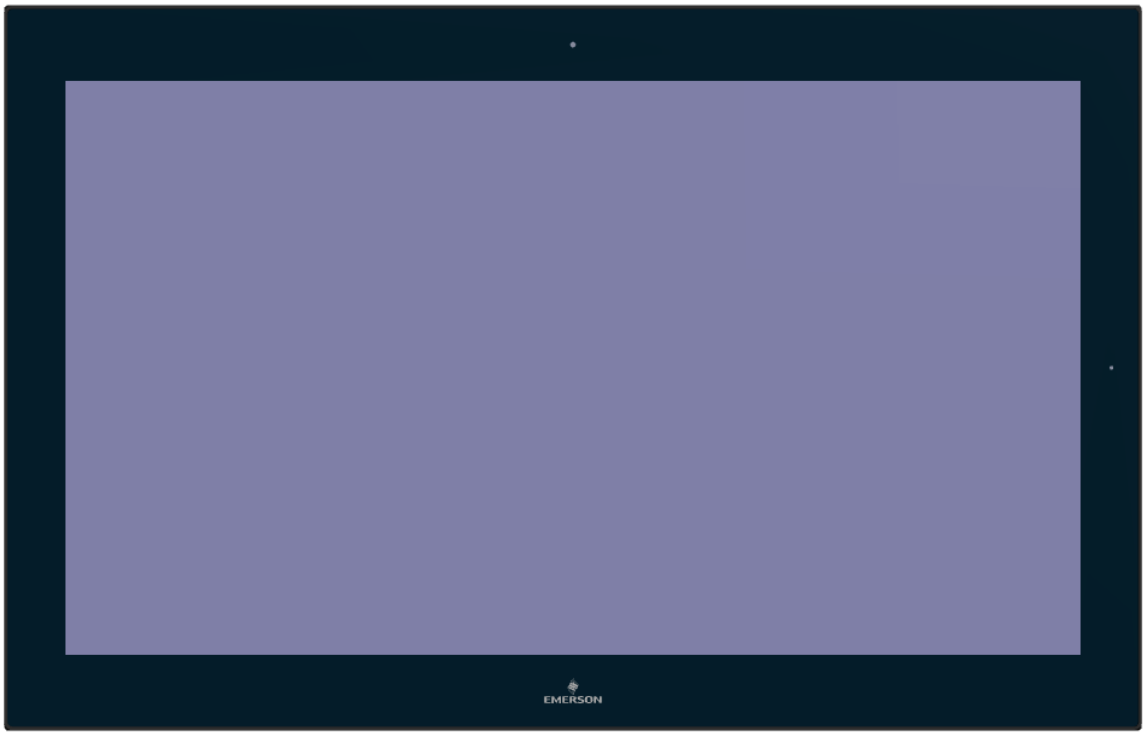

Figure 1.13 Rear View of 7”

Figure 1.14 Rear View of 10”

Figure 1.15 Rear View of 12”

Figure 1.16 Rear View of 15”

Figure 1.17 Rear View of 19”/24”

Section 2: Hardware

2.1 Key Features

Key features include:

- Freescale ARM Cortex A9 i.MX6 Dual Lite 1.0GHz SoC
- Onboard 2GB DDR3L SDRAM
- Onboard 4GB eMMC Flash
- 1 x 10/100/1000M Ethernet
- 1 x RS232/422/485
- 1 x USB 2.0 Type A
- 1 x USB OTG, Micro USB

2.2 Motherboard Specifications

Board Size	170mm x 113mm, 10 Layers, 1.6mm
CPU Support	Freescale ARM Cortex A9 i.MX6 Dual Lite 1.0GHz
Memory Support	Onboard 2GB DDR3L SDRAM
Storage	Onboard 4GB eMMC Flash Onboard Micro SD Card slot
Ethernet	1 x 10/100/1000MHz, RJ45 connector
Outside I/O	1 x USB 2.0, Type A connector 1 x RS-232/422/485, DB9 connector 1 x USB OTG, Micro USB connector
Internal I/O	1 x Debug port
Battery	CR2032 Coin Cell
Watchdog Timer	System Reset, Programmable via Software from 1 to 255 Seconds/Minutes
Temperature	Operating: -20 to 65°C Storage: -40 to 70°C
Humidity	Storage: 10 to 90% @40°C
OS Support	Linux Kernel 4.9.11 + Chromium Browser 54.0.2810.2 (Chromium 54 Over)

2.3 Jumpers and Connectors Locations

2.3.1 Setting Jumper Functions

Before installing the Web Panel, please set the necessary functions following the chart below.

Note: To determine Pin 1 of the jumper and port, please observe the marking beside the plug. it will be marked as “1”, a bolded line or a “∆”; see the welding plate at back side, the square welding plate is Pin 1.

(1) Setting Jumper Functions (SW1)

SW1: 2bit switching ON/OFF, used to set the recording and the starting mode of the Motherboard.

		ON	OFF
SW1	1.BOOT_MODE1_S	DOWNLOAD MODE	NORMAL MODE
	2.BOOT_DEV	SD	DEFAULT

Figure 2.4 Jumper Function (SW1)

2.3.2 Socket Description

2.3.2.1 Connecting Input Power (24V DC-in)

To connect to power, follow these steps:

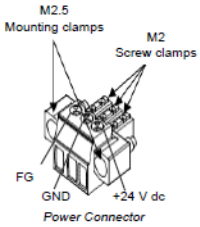

1. Verify that the power cable is not energized.
2. Loosen the screw clamps on the mating power connector.
3. Strip the insulation from the power cables.
4. Secure the power cable to the mating connector, noting polarity, and tighten the screw clamps. The torque for the attaching screws is 0.3 Nm (2.26 in-lb).

5. Apply dc power to the unit. During normal startup and operation, the LED status indicator displays as follows:
    - Solid amber while the RXi - Industrial Display unit is starting up
    - Solid green during normal operation
6. Once power is applied, the unit begins initializing. The first thing to display is the splash screen.

Be sure to connect a DC power cord to this 3-pin power connector. Using a voltage out of the range may fail to boot the system or cause damage to the system board.

Before connecting the Web Panel to other devices, please read this manual carefully first to prevent damage to the Motherboard.

(1) Power Socket (DC_IN1)

DC_IN1: (Conn. Header Socket, 3.5mm, 1 x 3PIN), used to provide 24V voltage for the system.

DC_IN1 Pin#	Signal
Pin1	FG
Pin2	DC_IN-
Pin3	DC_IN+

Figure 2.5 Power Socket (DC_IN1)

(2) USB Socket (USB_OTG1/USB1)

USB_OTG1: Conn. Mini-USB, B-Type Female, SMD-5P With DIP 4pin, used to load system firmware

Figure 2.6 USB, LAN, and COM Ports

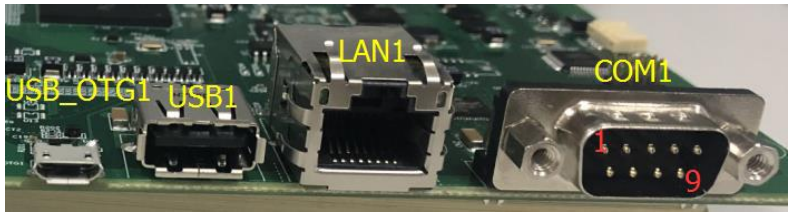

USB_OTG1 Pin#	Signal Name
1	5V_USB_OTG
2	USB_OTG_DN
3	USB_OTG_DP
4	USB0_ID
5	GND

USB1: Type A connector, supports USB devices.

USB_OTG1 Pin#	Signal Name
1	5V_USB_HOST1
2	USBDN_DM1
3	USBDN_DP1
4	GND
5	GND
6	GND

(3) LAN Socket (LAN1)

LAN 1: Conn. I/O Port, RJ45, 1000M, provide a solid RJ45 Ethernet Dock, GREEN denotes data transfer, YELLOW verifies a connection to Internet.

(4) Connecting Socket (COM1)
COM1: Conn. I/O Port, RS232, DB9, Male. Standard DB9 port, provide 1 route for RS232/422/485.

COM1 Pin#	Signal Name
1	DCD1-_422TX-_485-
2	RXD1_422TX+_485+
3	TXD1_422RX+
4	DTR1-_422RX-
5	GND
6	NC
7	NC
8	NC
9	NC

(5) Debug Socket (DEBUG1)
DEBUG1: Conn. 1.25mm, (DF14 with pointing) SMD-4P, use for debugging information.

DEBUG Pin#	Signal Name
1	3P3V_S0_IO
2	UART1_TXD_DEBUG
3	UART1_RXD_DEBUG
4	GND

(6) SD-Card Socket (SD1)
SD1: Socket, mini SD/TF Card, 9 pin, SMD, supports SD/TF Card devices.

(7) BAT1 Socket (BAT1)
BAT1: BAT Socket, BS-10-A1B0J001, 20mm SMT, supports non-chargeable batteries. CR-2032

(8) Backlight Board Socket (BTB_MAIN_TB572B_1)
BTB_MAIN_TB-572B_1: Conn. Female, WCON, 2243-225M3CUT, 2 x 25P, 2.00mm, 180°, H=4.35, 10u”, SMD-50P, TB-572B Backlight Board Socket.

2.4 LED Indicators

2.4.1 Operation Status LEDs (Screen)

All RXi Industrial Displays have a tri-color LED built into the screen that provides visual indication of the operation status.

LED State	System State
Amber, Solid	Operating system starting
Green, Solid	Normal operating state
Green, Blinking	Backlight off
Red, Blinking	Backlight failure
Off	Power not applied to unit

2.4.2 Ethernet Port Operation LEDs

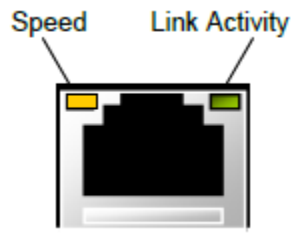

LED	LED State	Operating State
Speed	Yellow, ON	10/100/1000
Link Activity	Green, ON	Link Status

Section 3: Software Installation

3.1 Installation Pictures

The following images show typical screens during software installation.

The operating system for the RXi – Web Panel is Linux.

Figure 3.1 Linux

The web browsers Chromium, and Firefox are both compatible with the RXi – Web Panel.

Figure 3.2 Chromium Browser

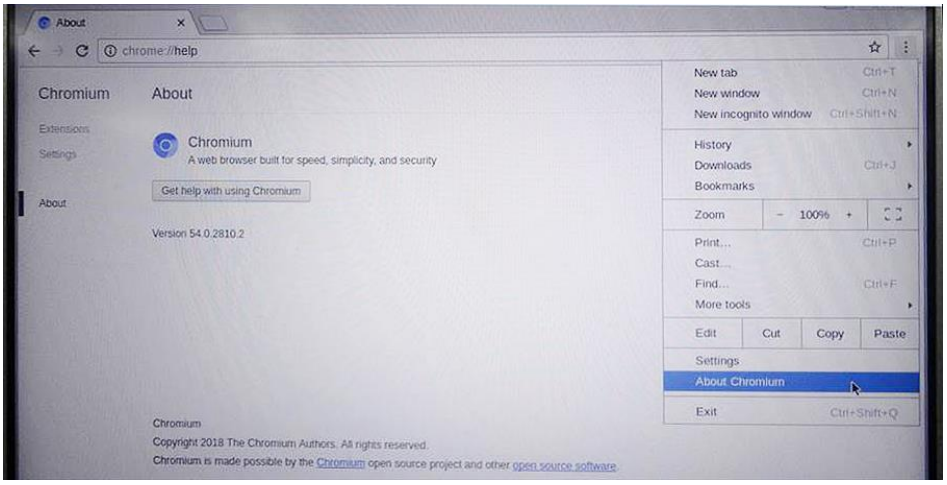

Figure 3.3 Firefox Browser

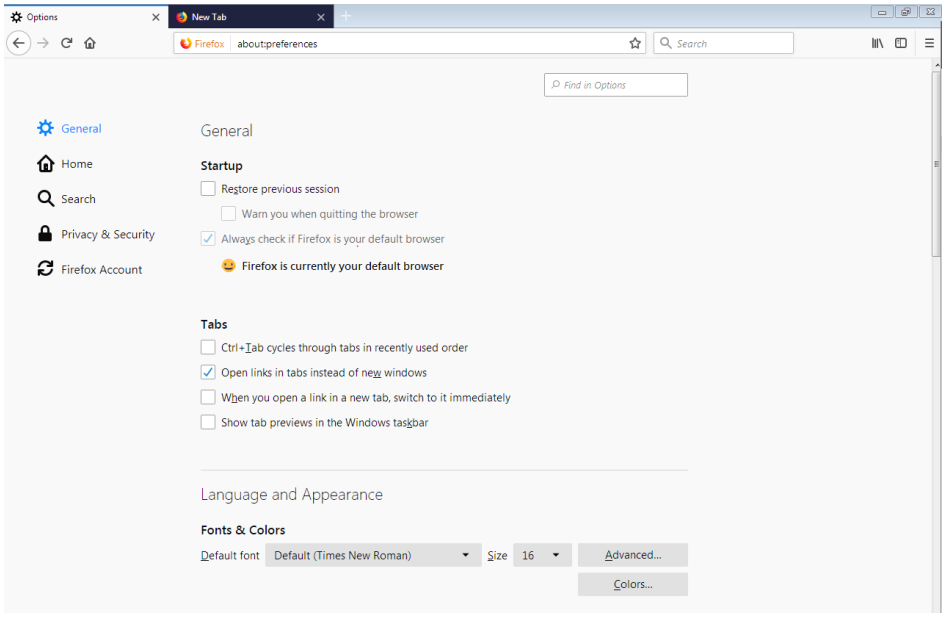

Section 4: Mounting Information

4.1 Panel Mount

Figure 4.1 Panel Cutout Dimension Definitions

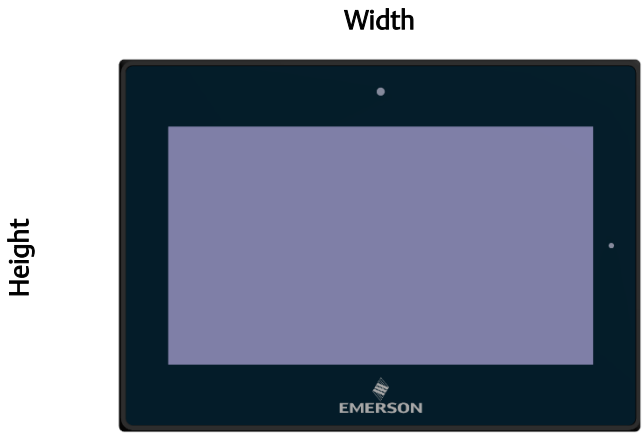

Display Size (in)	Width (mm)	Height (mm)
7	183.5	128.5
10	255.5	174
12	317	214.5
15	398	245.5
19	482	297
24	581	360

4.1.1 Panel Mount Installation Steps

1. Verify that the gasket is present and properly seated in the bezel channel located on the sides of the unit

2. Insert the Web Panel into the mounting panel cutout

Figure 4.2 Panel Install View

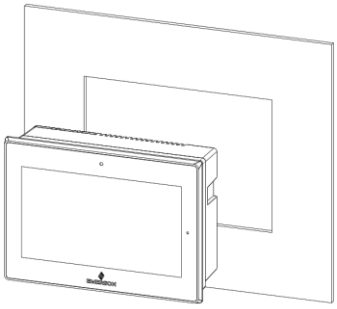

3. Insert the hook of the mounting bracket into the mounting hole as displayed in the following figure.

Figure 4.3 Mounting Bracket Insertion

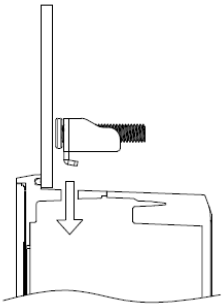

4. Tighten the screws on the mounting bracket in a clock-wise direction.

Figure 4.4 Tighten Mounting Bracket

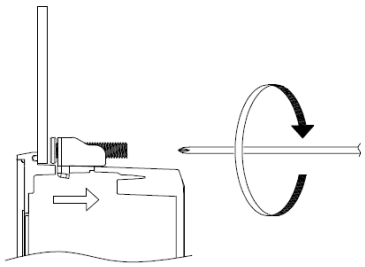

4.2 Mounting to Modular Display

Figure 4.5 7” Mount

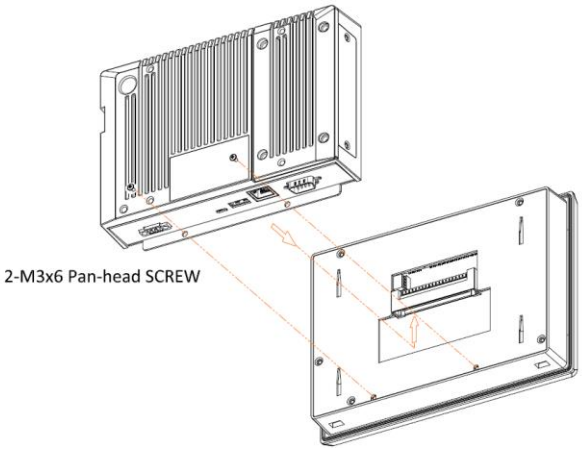

Figure 4.6 10” Mount

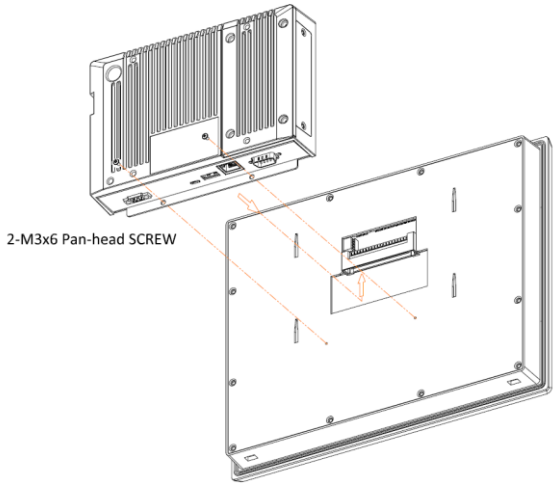

Figure 4.7 12” Mount

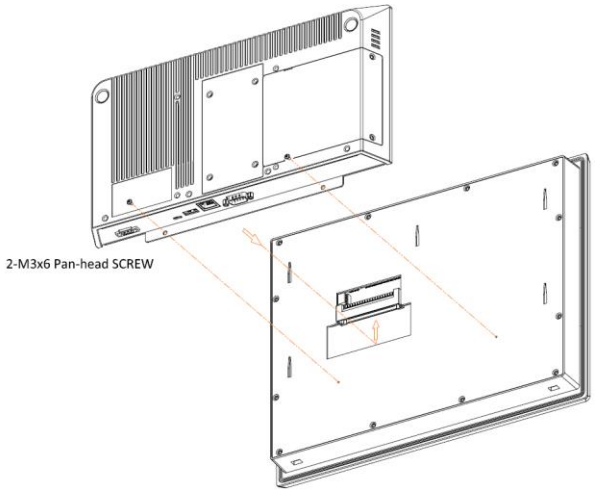

Figure 4.8 15” Mount

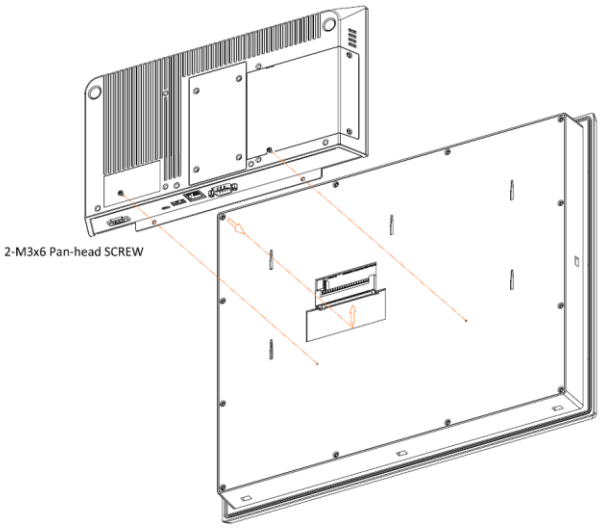

Figure 4.9 19”/24” Mount

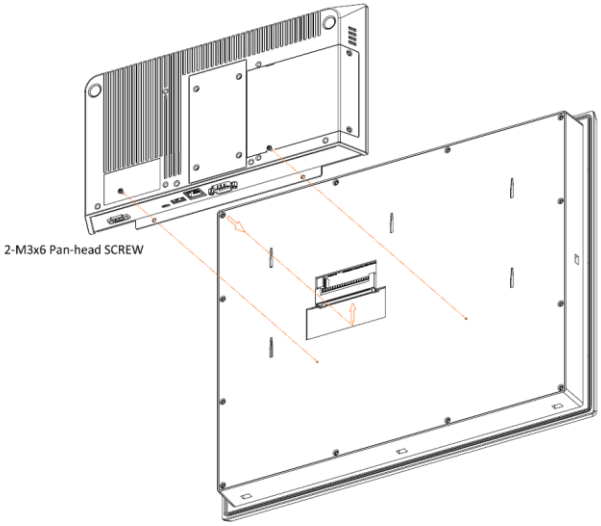

4.3 VESA Mount

Figure 4.10 7” VESA Mount

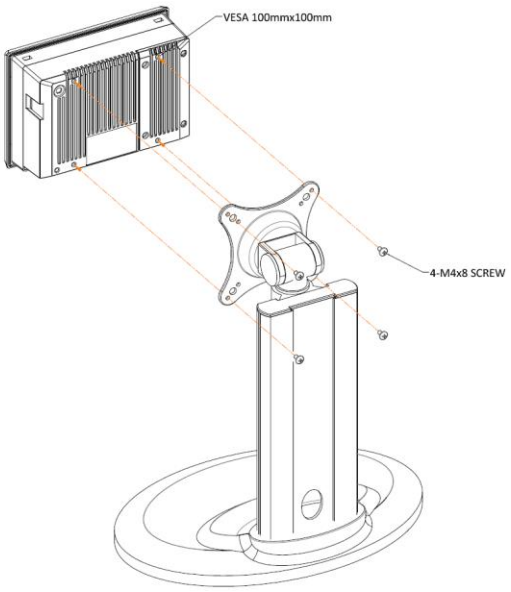

Figure 4.11 10” VESA Mount

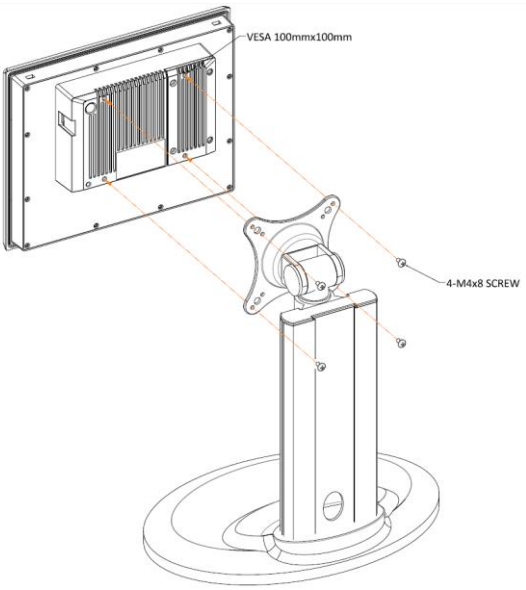

Figure 4.12 12”/15” VESA Mount

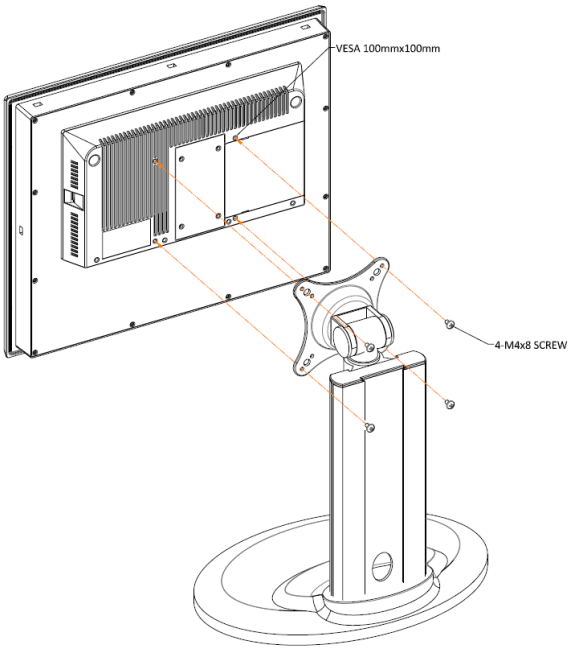

Figure 4.13 19”/24” VESA Mount

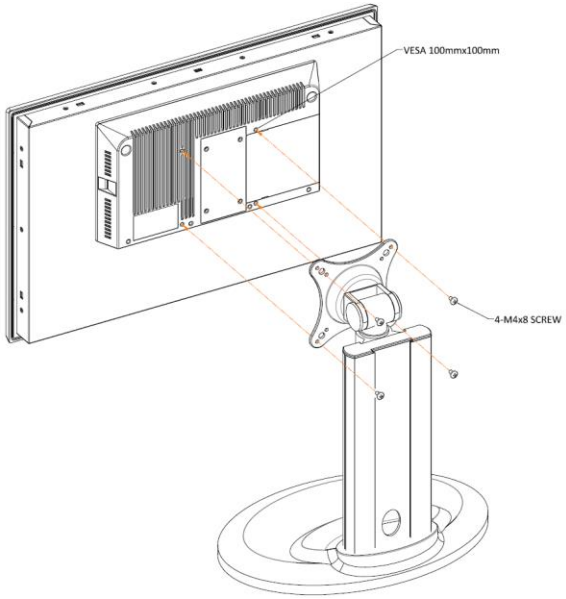

Contact Information:

North & South America
18703 GH Circle
PO Box 508
Waller, Texas 77484
USA
T +1 281 727 5300

2500 Park Avenue West
Mansfield, Ohio 44906
USA
T +1 419 529 4311

9009 King Palm Drive
Tampa , Florida 33619
USA
T +1 813 630 2255

4112-91A Street
Edmonton, Alberta T6E5V2
Canada
T +1 780 450 3600

Av. Hollingsworth,325
Iporanga
Sorocaba, SP 18087-105
Brazil
T +55 15 3238 3788

Europe
Asveldweg 11
7556 BT Hengelo(O)
The Netherlands
T +31 74 256 1010

Siemensring 112
D-47877 Willich
Germany
T +49 2154 499 660

30/36 Allee du Plateau
93250 Villemomble
France
T +331 48 122610

6 Bracken Hill
South West Industrial Estate
Peterlee, Co Durham
SR82LS, United Kingdom
T +44 191 518 0020

3 Furze Court
114 Wickham Road
Fareham, Hampshire
PO167SH ,United Kingdom
T +44 132 984 8900

Via Montello 71/73
20038 Seregno
Italy
T +39 0362 2285207

Selska cesta 93
10000 Zagreb
Croatia
T +385 913654292

ul. Konstruktorska str 11A
02-673 Warsaw
Poland
T +48 22 4589237

Hungári körút 166-168
H-1146 Budapest
Hungary
T +36 14624034

Hajkova 2747/22
130 00 Praha 3
Czech Republic
T +42 2 81002666

Zelezniciarska 13
811 04 Bratislava
Slovakia
T +42 1252442071

Blegistrasse 21,
P.O. Box 1046
CH 6341 Baar
Switzerland
T +41 (41) 7686215

2-4, Gara Herastrau St.
District 2, Nova Building,
5th floor 020334 Bucharest
Romania
T +40 212062506

Icerenkoy MAh. Topcu Ibrahim Sk.
No:13 K:4 Icerenkoy
Istanbul, Turkey
T +90 2165739848408

Middle East & Africa
2 Monteer Road, Isando
Kempton Park, 1600
South Africa
T +27 11 974 3336

PO Box 17033
Jebel Ali Free Zone
Dubai,
United Arab Emirates
T +971 4883 5235

Asia Pacific
19, Kian Teck Crescent,
Singapore 628885
T +65 6501 4600

471 Mountain Highway
Bayswater, Victoria 3153
Australia
T +61 3 9721 0200

9/F Gateway Building
No.10 Ya Bao Road
Chaoyang District
Beijing, P.R. China
T +86 10 5821 1188

No 15 Xing Wang Road
Wuqing Development Area
Tianjin 301700
P.R. China
T +86 22 8212 3300

Lot 13112, Mukim Labu,
Kawasan Perindustrian Nilai
71807 Nilai, Negeri Sembilan
Malaysia
T +60 6 799 2323

Delphi B Wing, 601 & 602
6th Floor, Central Avenue
Powai, Mumbai 400076
India
T +91 22 6662 0566

NOF Shinagawa Konan Building
1-2-5, Higashi-shinagawa
Shinagawa-Ku, Tokyo
140-0002 Japan
T +81 3 5769 6873

Please visit our website for up to date product data.
www.Emerson.com