DATE	REV.	SYM	REVISION DIRECTIVE	DR.	APP.
2007.6.21	3.0		FINAL RELEASED DWG	X.H.P	W.J.H.

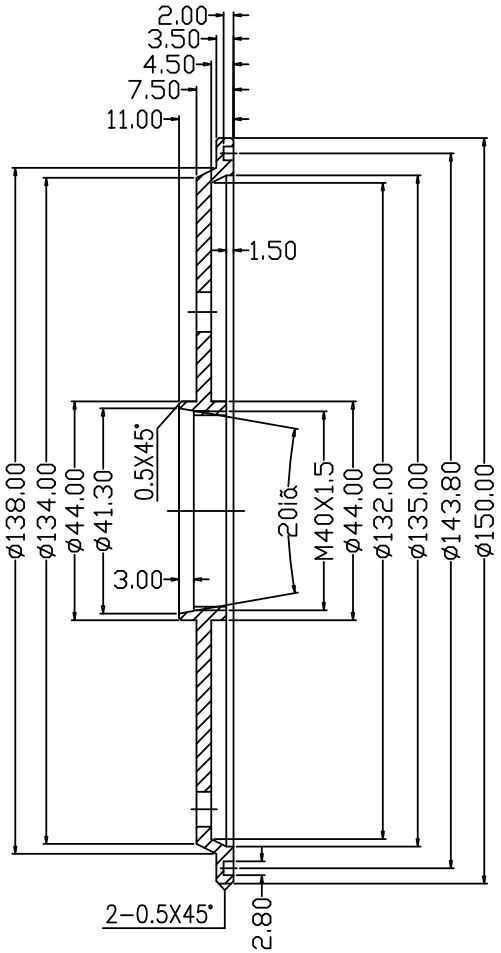

SECTION A-A

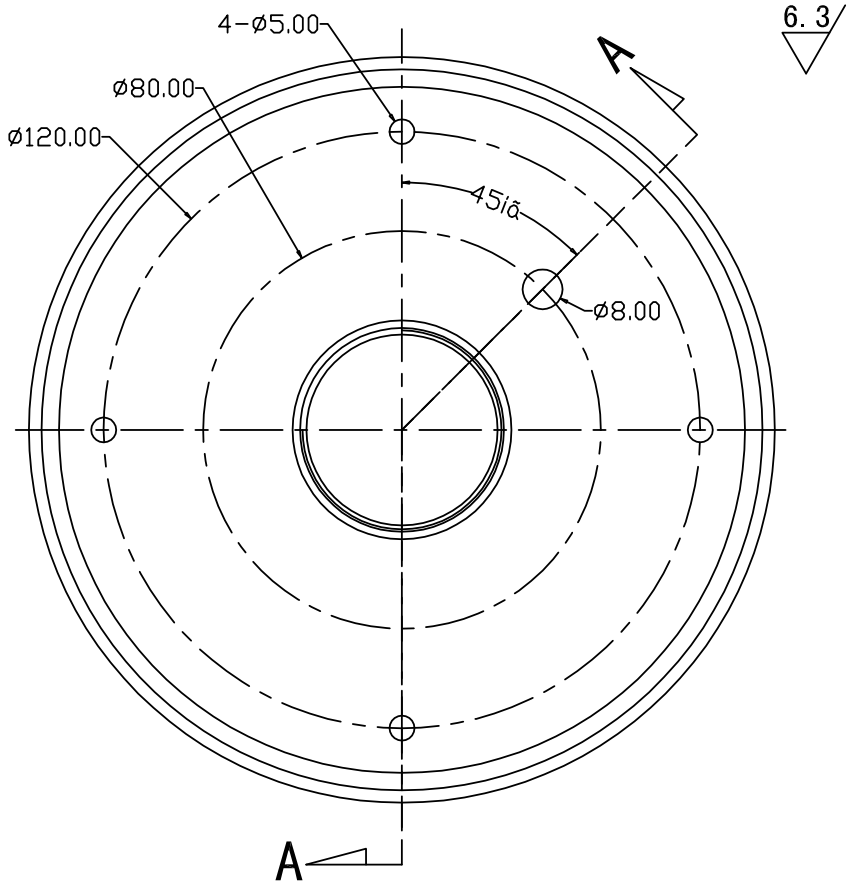

"NOTES: ALL DIMENSION ARE IN METRIC"

SPECIFICATION:

1. THE INTERFERENCE FIT IS APPLIED BETWEEN HOLD ø8 AND IN-GAS NOZZLE(SPPL-003-001B).
2. REMOVE ALL BURRS AND SHARP EDGES.

Honeywell Analytics,Inc			P.C: SOMA980301AA
			DATE: 2007.6.21
TOLERANCES: (EXCEPT AS NOTED) ISO 2768-m	TITLE	DUCT MOUNTING KIT FIXING SEAT	DRAW BY: X.H.P
			APPROVE BY: W.J.H.
ANGULAR NA	MATERIAL		DRAWING NUMBER / REV
SCALE NA		Q235	SPPL-003-001A / 3.0