TI01013K/09/EN/17.22-00
71571190
2022-04-06

Technical Information
HAW569

Surge arrester

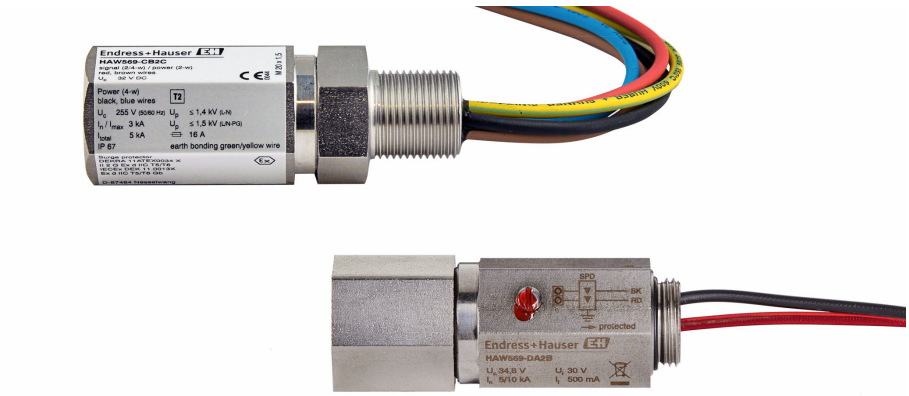

Surge arrester for field mounting

Application

Surge arresters are used to weaken residual currents from upstream lightning protection steps and to limit system-induced or system-generated overvoltage surges.

HAW569 units are primarily used in process-related instrumentation within the chemicals, pharmaceuticals, and oil and gas industries as well as in the water and wastewater sectors.

Your benefits

- Compact device for the protection of signal/communication cables (optionally available with Ex ia approval) or for the simultaneous protection of signal, communication and power supply cables (optionally available with Ex d approval)
- SIL2
- Increased plant availability in the field of process automation, as the electronic components are protected
- Easy and space-saving direct mounting for installation in field transmitters
- Intrinsically safe or flameproof in accordance with ATEX & IEC
- Fieldbus-compatible
- Parallel connection avoids introduction of any resistance into the loop (screw-in version)
- No additional cable entry required for lead-through version

Endress+Hauser
People for Process Automation

Table of contents

Function and system design

Operating principle

Surge arrester HAW569 is suitable for protecting the electronics against destruction caused by surges. Surges occurring in signal cables (e.g. 4 to 20 mA), communication cables (fieldbus systems) and power supply cables are diverted safety to ground. The functionality of the transmitter or the electronics to be protected is unaffected, since no problematic voltage drop occurs due to the impedance-free connection of the protective devices.

Application

Surge protection equipment used in various measuring points, based on the example of a wastewater treatment plant.

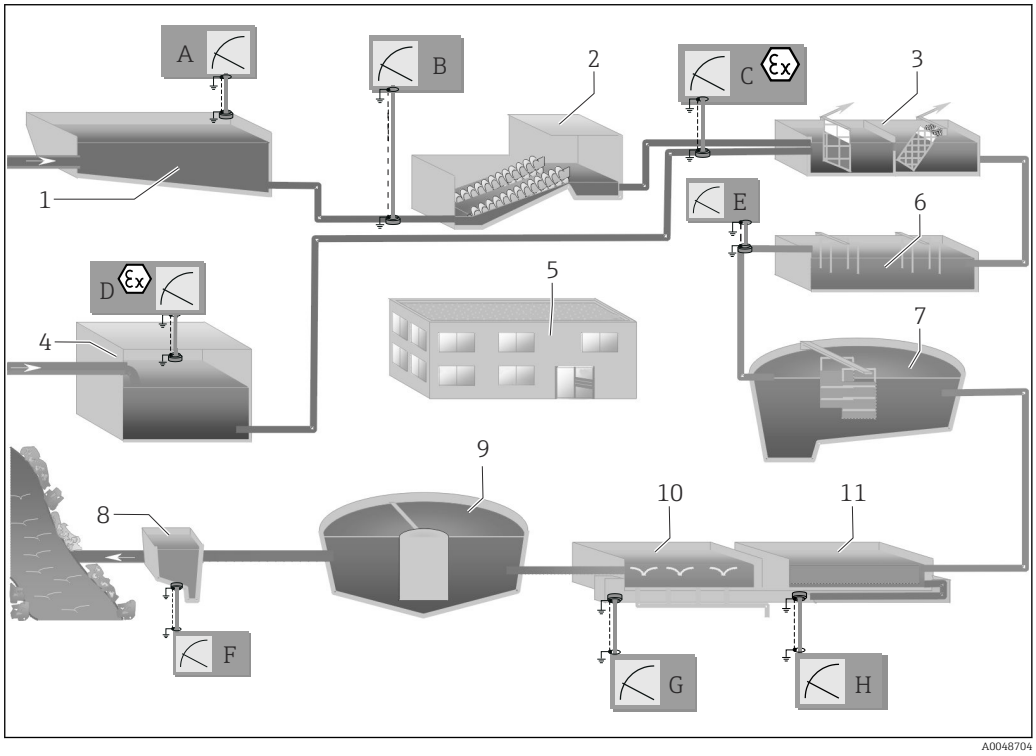

1 Application example: wastewater treatment plant (schematic diagram)

Item	Measuring point	Item	Measured variable
1	Stormwater overflow basin	A	Level and quantity
2	Pumping station	B	Quantity
3	Coarse/fine bar screens	C	Pressure
4	Fecal intake	D	Level
5	Wastewater treatment plant control room		
6	Grit / grease trap	E	pH value and temperature
7	Primary clarifier		
8	Outflow shaft	F	pH value and temperature
9	Secondary clarifier		
10	Aeration basin	G	O_2 value
11	Denitrification	H	Quantity

Available versions

HAW569-AA2B and HAW569-DA2B

Lead-through version, with optional Ex ia approval
- Exclusively for the protection of signal and communication cables.
- The version HAW569-DA2B is used if Ex ia is required.
- No additional cable gland is needed.

HAW569-CB2C

Screw-in version can be used in Ex d area.
- For screwing into a free cable entry.
- Simultaneous protection of signal cable/communication cable and power supply cable (for 4-wire devices) is possible.
- Is used if Ex d overvoltage protection is needed.
- Can also be used if either just the signal cable/communication cable or the power supply cable is to be protected.

Measuring point equipment

In addition to the following recommendations for cable shield connections and their connections to the housing and grounding, particular attention must be paid to the relevant guidelines and operating instructions of the plant operator and the recommendations of the fieldbus user organization (e.g. PI).

	Example for measuring point	Measuring point equipment	Connection diagram
Fecal intake Intrinsically safe level	Level measurement with Prosonic M FMU41 measuring device from Endress+Hauser PROFIBUS PA signal	1 HAW569-DA2B for PROFIBUS PA signal cable	→ 2, 4
Pipe Pump pressure monitoring, intrinsically safe	Pressure measurement with Endress+Hauser Cerabar S pressure transmitter 4 to 20 mA	1 HAW569-DA2B for 4 to 20 mA remote signal	→ 3, 5
Stormwater overflow basin	Level measurement with Endress+Hauser Prosonic M FMU40 compact ultrasonic level sensor 4 to 20 mA	1 HAW569-AA2B for 4 to 20 mA remote signal	→ 4, 5
Other application example: **Flow measurement**	e.g. Coriolis Proline Promass, Proline t-mass, Proline prosonic 92F or 91W, 93W	1 HAW569-CB2C for power supply and signal cable	, → 5, 5

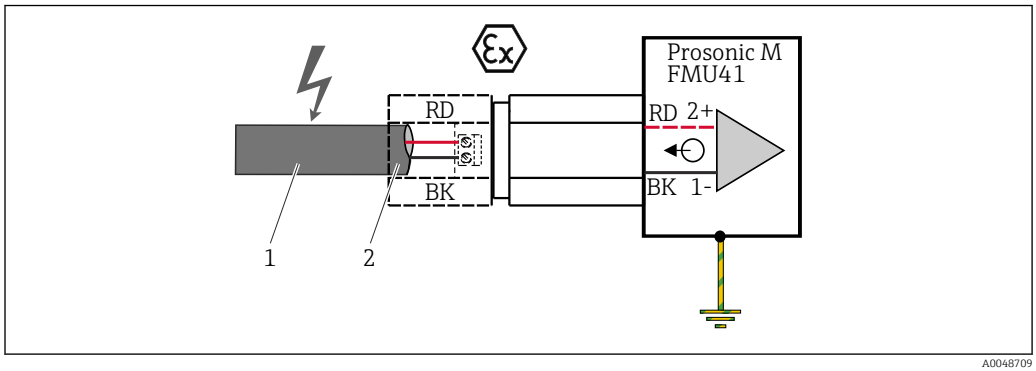

A0048709

2 *Level measurement with Prosonic M FMU41*

1 *PROFIBUS PA signal cable*
2 *Direct connection of cable shield to housing by means of a suitable cable gland*

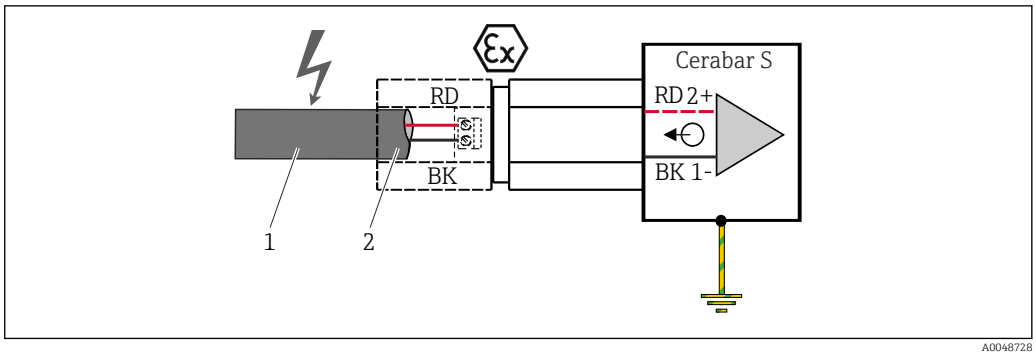

3 *Pressure measurement with Cerabar S pressure transmitter*

1 4 to 20 mA analog signal cable
A Direct connection of cable shield to housing by means of a suitable cable gland

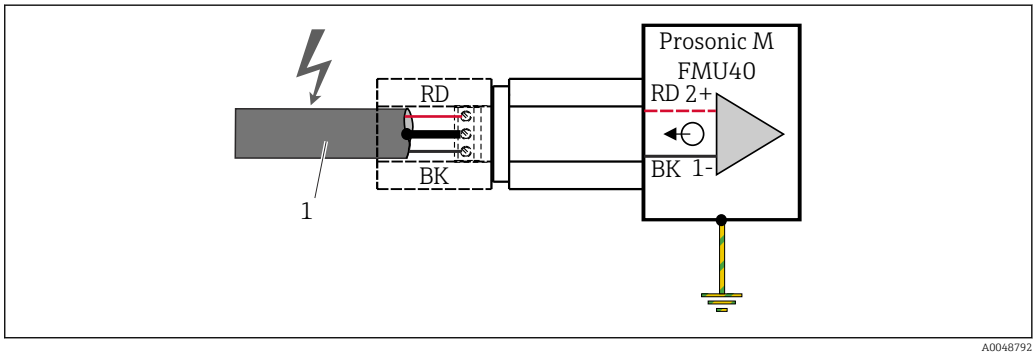

4 *Level measurement with Prosonic M FMU40 compact ultrasonic level sensor*

1 4 to 20 mA analog signal cable

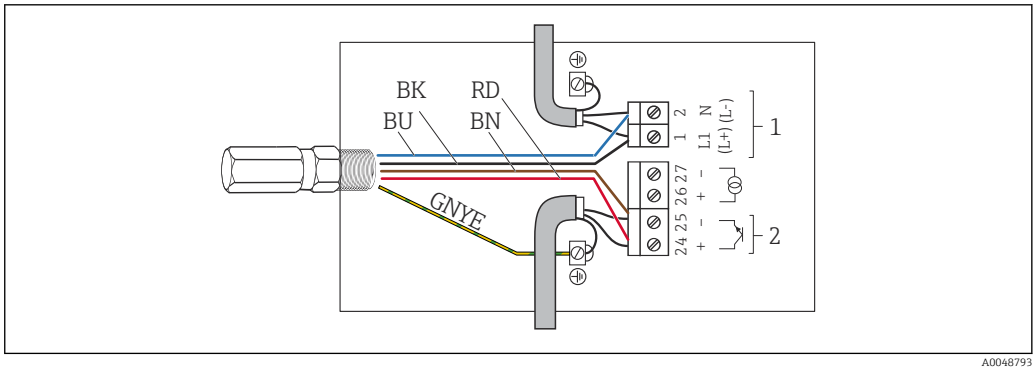

5 *Flow measurement, e.g. Coriolis Proline Promass; Proline t-mass, Proline Prosonic 92F or 91W, 93W*

1 Power supply line
2 Pulse output

Power supply

Electrical connection

HAW569-AA2B (non-Ex lead-through version)

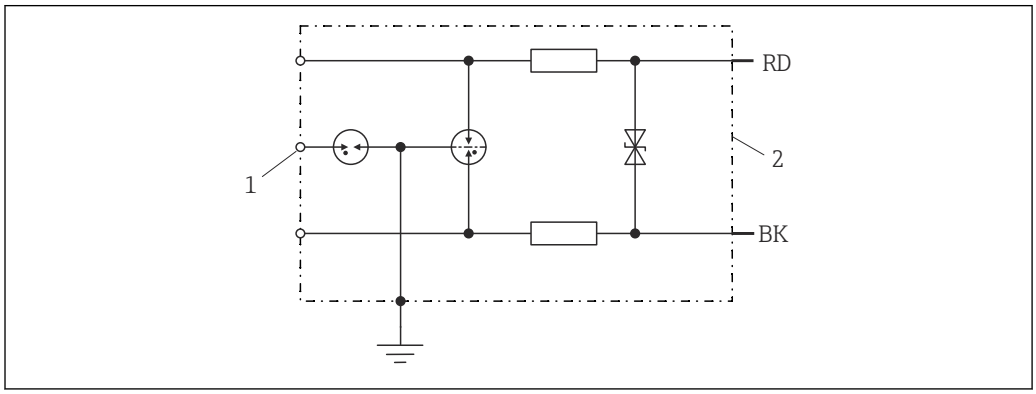

6 Internal circuitry HAW569-AA2B

1 Shielding
2 Protected

HAW569-DA2B (Ex ia lead-through version)

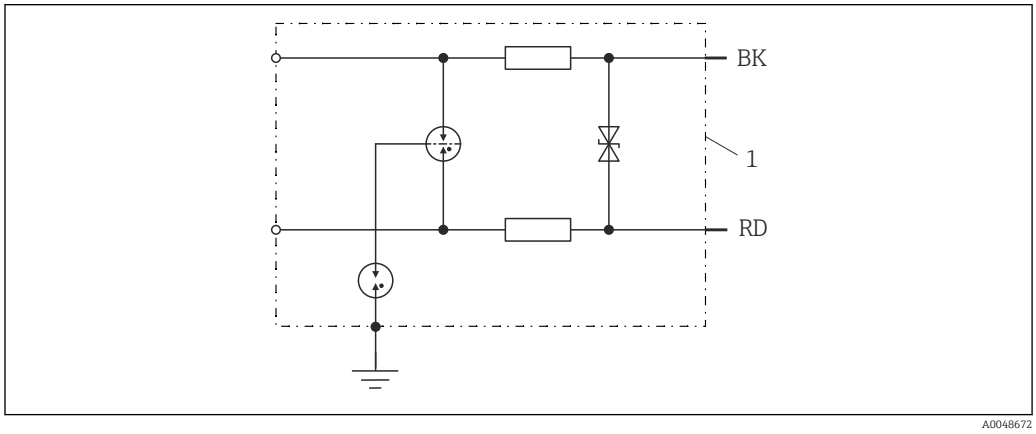

7 Internal circuitry HAW569-DA2B

1 Protected

HAW569-CB2C (Ex d screw-in version)

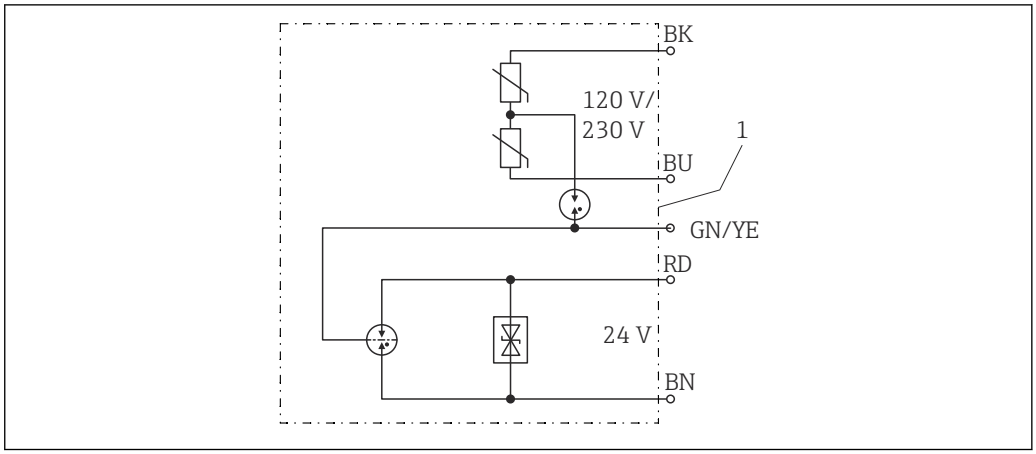

8 Internal circuitry HAW569-CB2C

1 Protected

SPD class

HAW569-xA2B	HAW569-CB2C
Type 2 P1	Type 2 P2

Supply voltage

Nominal voltage

HAW569-xA2B	HAW569-CB2C
24 V	24 V signal 120 V / 230 V power supply

Maximum continuous voltage

	HAW569-xA2B	HAW569-CB2C
DC:	34.8 V	32 V signal 255 V power supply
AC:	24.5 V	22.6 V signal 255 V power supply

Current consumption

	HAW569-AA2B	HAW569-DA2B	HAW569-CB2C
Nominal current I_L	0.5 A		0.55 A at 80 °C (176 °F)
C2 nominal discharge current [I_n] (8/20) per line	10 kA	5 kA	-
C2 nominal discharge current [I_n] (8/20) total	10 kA	10 kA	10 kA
C2 nominal discharge current [I_n] (8/20) shielding - PG	20 kA	-	-
Nominal discharge current (8/20) L - N [I_n]	-	-	3 kA
Total discharge current (8/20) L+N - PE [I_{total}]	-	-	5 kA
D1 lightning surge current [I_{imp}] (10/350) line - PG	-	-	1 kA

Voltage protection level

	HAW569-AA2B	HAW569-DA2B	HAW569-CB2C
Voltage protection level, line - line at I_n C2	≤ 65 V	≤ 55 V	≤ 58 V
Voltage protection level, line - PG at I_n C2	≤ 650 V	≤ 1 100 V	≤ 900 V
Voltage protection level, shielding - PG at I_n C2	≤ 650 V	-	-
Voltage protection level, line - line at 1 kV/µs C3	≤ 50 V	≤ 49 V	≤ 50 V
Voltage protection level, line - PG at 1 kV/µs C3	≤ 500 V	≤ 1 000 V	≤ 850 V
Voltage protection level, shield - PG at 1 kV/µs C3	≤ 600 V	-	-
Voltage protection level, L - N	-	-	≤ 1.4 kV
Voltage protection level, L/N - PE	-	-	≤ 1.5 kV

Limit frequency

HAW569-AA2B	HAW569-DA2B	HAW569-CB2C
14 MHz	7 MHz	-

Series impedance per line

HAW569-AA2B	HAW569-DA2B	HAW569-CB2C
2.2 Ohm	1.8 Ohm	-

Capacitance

	HAW569-AA2B	HAW569-DA2B	HAW569-CB2C
Line/line	≤ 400 pF	≤ 850 pF	≤ 25 pF
Line/PG	≤ 20 pF	≤ 15 pF	≤ 15 pF

Maximum line side overcurrent protection

Only for unit type HAW569-CB2C:

16 A gL/gG or B 16 A

Shield grounding, only HAW569-AA2B (non-Ex)

As a rule, a cable shield should be grounded continuously over the entire length of the cable. The shield should be grounded by means of direct shield grounding at least at both ends of the cable. If direct grounding of the shield at both ends is not possible or desired, e.g. to avoid low-frequency equalizing currents, indirect shield grounding should be provided at one end. Equalizing currents are thus avoided yet EMC requirements are still met.

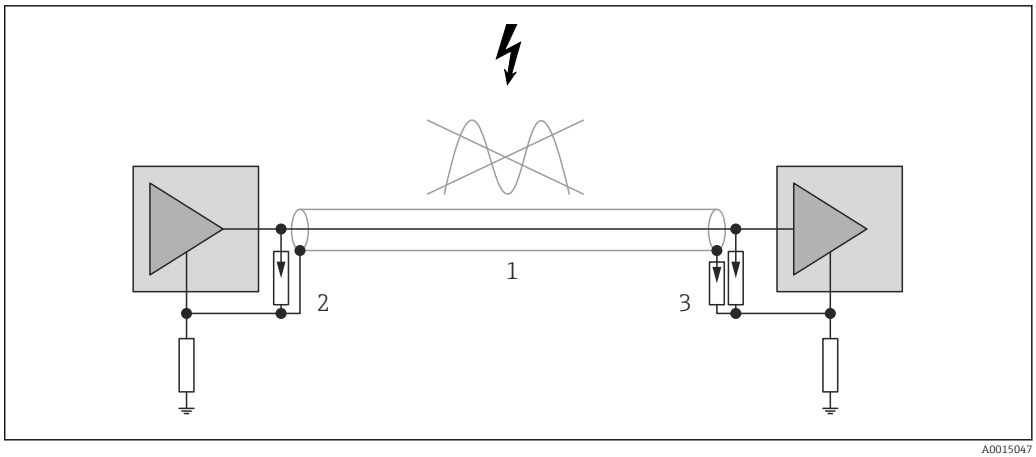

9 *Direct and indirect shield grounding*

1 *Cable shielding*
2 *Direct shield grounding*
3 *Indirect shield grounding*

For indirect shield grounding, twist the cable shielding and connect to the appropriate terminal on the surge arrester. Shield grounding is via the integrated gas discharge tube.

The EMC cable gland, which is available as an accessory, enables direct shield grounding.

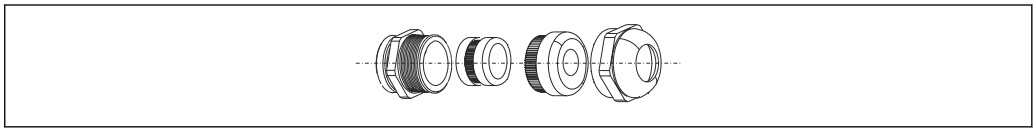

10 *Cable gland with shield grounding for HAW569*

Mounting

Mounting location

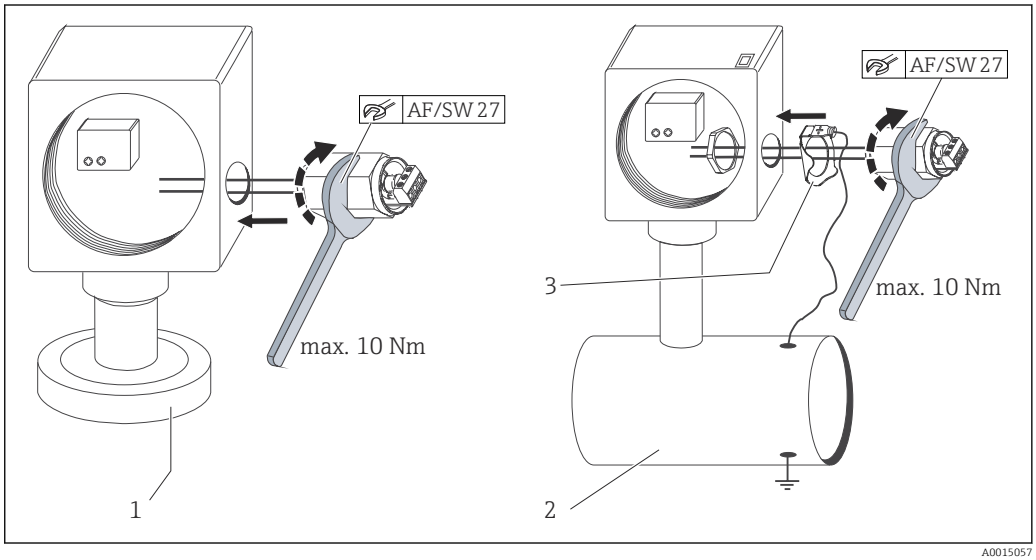

11 *Lead-though version HAW569-xA2B*

1 *Mounting in field housing (metal housing) without grounding ring - grounding via metal housing*
2 *Mounting in field housing (non-metal housing) with grounding ring*
3 *Grounding ring (available as accessory)*

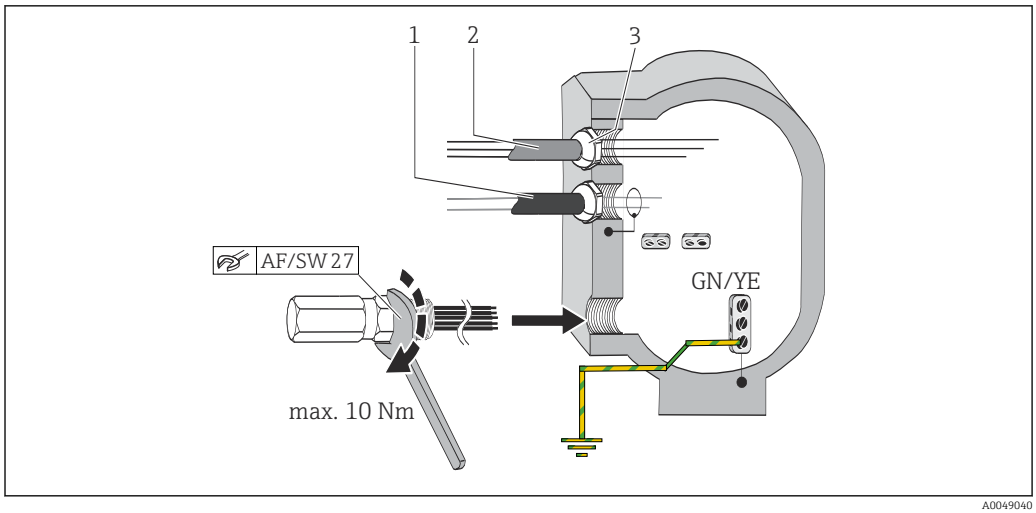

12 Screw-in version HAW569-CB2C

1 Signal cable
2 Power supply
3 Ex cable gland

Orientation	No restrictions
Installation instructions	Mounting on field/device side: M20 x 1.5 internal thread / M20 x 1.5 external thread

Environment

Ambient temperature range	−40 to +80 °C (−40 to +176 °F)
Storage temperature	See "Ambient temperature range"
Degree of protection	Following correct mounting and electrical connection IP 67

Mechanical construction

Design, dimensions

HAW569-xA2B (lead-through version)

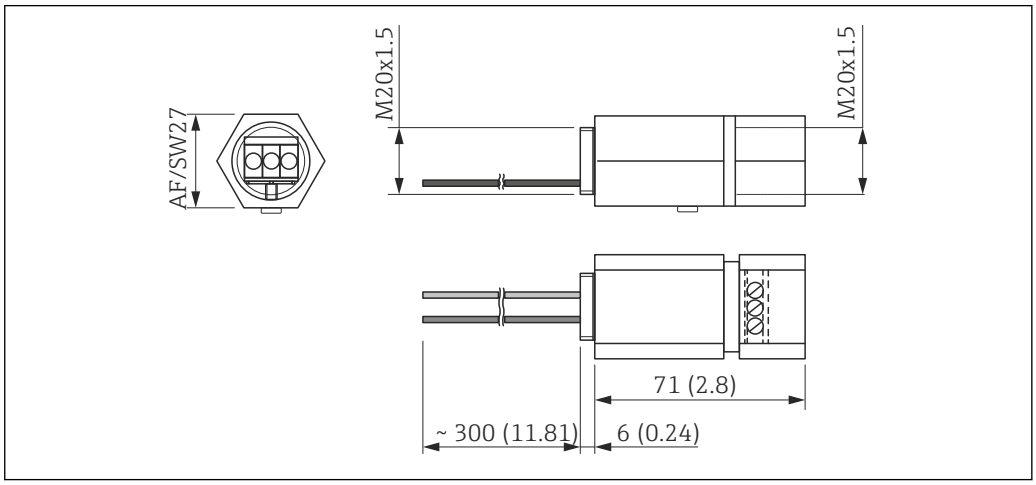

13 Dimensions for HAW569-xA2B in mm (in), surge arrester for protecting signal cables, optionally for protecting intrinsically safe measuring circuits.

HAW569-CB2C (screw-in version)

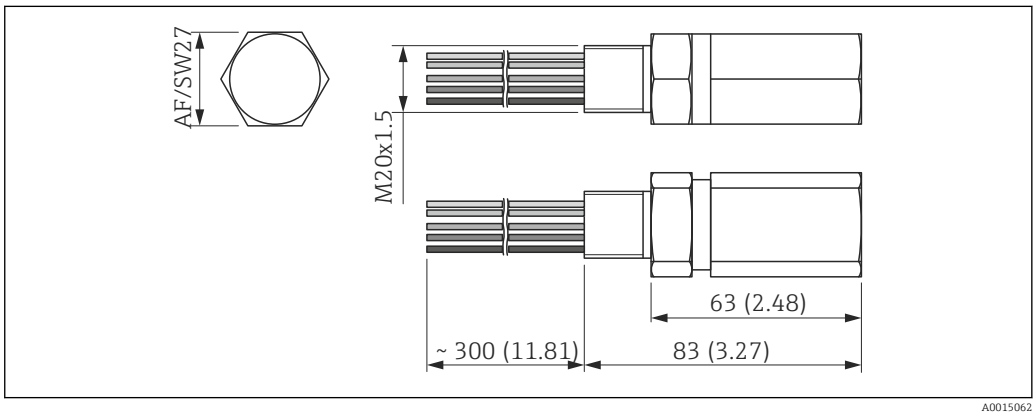

14 Dimensions for HAW569-CB2C in mm (in), surge arrester in flameproof enclosure for use in hazardous areas.

Weight

Approx. 175 g (6.17 oz.)

Materials

HAW569-xA2B

Stainless steel 1.4301 (AISI 304)

HAW569-CB2C

Stainless steel 1.4401 (AISI 316)

Process connection

	HAW569-xA2B	HAW569-CB2C
Connection to field housing	M20 x 1.5 external thread	M20 x 1.5 external thread
Surge arrester input side	M20 x 1.5 internal thread	-

Terminals

Input/output connection

HAW569-xA2B	HAW569-CB2C
Screw/connecting cables 2 x 1.5 mm² (16 AWG), length 300 mm (11.81 in)	Connecting cables 5 x 1.3 mm² (16 AWG), length 250 mm (9.84 in)

Connection cross-section

	HAW569-xA2B	HAW569-CB2C
Single strand	0.08 to 2.5 mm² (28 to 14 AWG)	No input terminals
Multi strand	0.08 to 1.5 mm² (28 to 16 AWG)	No input terminals

Certificates and approvals

Current certificates and approvals that are available for the product can be selected via the Product Configurator at www.endress.com:

1. Select the product using the filters and search field.
2. Open the product page.
3. Select **Configuration**.

Ordering information

Detailed ordering information is available for your nearest sales organization www.addresses.endress.com or in the Product Configurator under www.endress.com :

1. Click Corporate
2. Select the country
3. Click Products
4. Select the product using the filters and search field
5. Open the product page

The Configuration button to the right of the product image opens the Product Configurator.

Product Configurator - the tool for individual product configuration
- Up-to-the-minute configuration data
- Depending on the device: Direct input of measuring point-specific information such as measuring range or operating language
- Automatic verification of exclusion criteria
- Automatic creation of the order code and its breakdown in PDF or Excel output format
- Ability to order directly in the Endress+Hauser Online Shop

Accessories

Adapter thread M20 -> NPT½

Adapter for installation in the NPT½ cable gland. Material: nickel-plated brass.

EMC cable gland

Only for HAW569-AA2B / -DA2B.

Set 2 x M20x1.5, IP68 for direct/indirect shield grounding, cable Ø 6.5 to 13 mm (0.26 to 0.51 in).

Order as an additional option in the product structure for HAW569 or separately via order code: RK01-AS

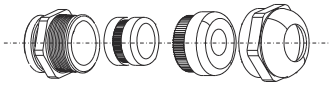

A0015051

15 *EMC cable gland for shield grounding*

Grounding ring set

Only for HAW569-AA2B / -DA2B.

The HAW569 M20 grounding ring set is required to ground the surge arrester where the sensor housing is plastic.

Order as an additional option in the product structure for HAW569 or separately via order code: RK01-AT

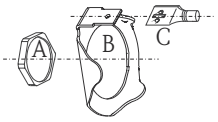

A0015052

16 *Grounding ring set*

A Counter nut
B Grounding ring
C Flat plug

Documentation

The following document types are available on the product pages and in the download area of the Endress+Hauser website (www.endress.com/downloads):

Document	Purpose and content of the document
Technical Information (TI)	**Planning aid for your device** The document contains all the technical data on the device and provides an overview of the accessories and other products that can be ordered for the device.
Brief Operating Instructions (KA)	**Guide that takes you quickly to the 1st measured value** The Brief Operating Instructions contain all the essential information from incoming acceptance to initial commissioning.
Safety Instructions (XA)	Safety Instructions (XA) are supplied with the device depending on the approval. They are an integral part of the Operating Instructions. The nameplate indicates which Safety Instructions (XA) apply to the device in question.
Supplementary device-dependent documentation (SD/FY)	Additional documents are supplied depending on the device version ordered: Always comply strictly with the instructions in the supplementary documentation. The supplementary documentation is an integral part of the device documentation.

71571190

www.addresses.endress.com

Endress+Hauser

People for Process Automation