GFK-2959B

December 2015

Digital Output Modules
EP-2214, EP-2614, EP-2634, EP-2218, EP-225F
Relay Output Module EP-2714
Solid-state Relay Output Module EP-2814

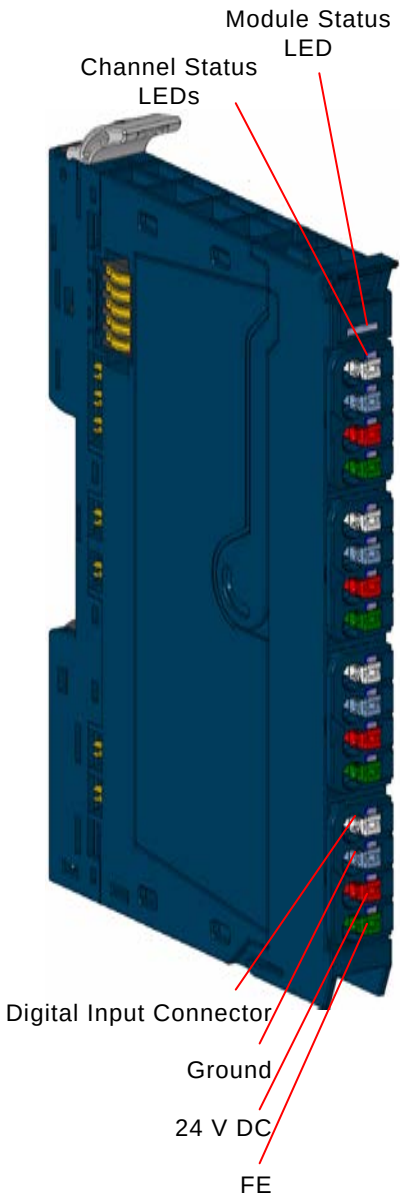

Digital Output Module

GE provides a range of RSTi-EP digital output modules with 4, 8 or 16 outputs, which are primarily used for the incorporation of decentralized actuators.

All outputs are designed for DC-13 discrete outputs according to DIN EN 60947-5-1 and IEC 61131-2 specifications. Frequencies of up to 1 kHz are possible except for relay and SSR output modules. Protection of the outputs ensures maximum system safety (Relay and SSR modules do not support short circuit protection). This consists of an automatic restart following a short-circuit.

The digital relay output module EP-2714 can control up to 4 discrete outputs, each with a maximum of 6 A. Each connector features a potential-free changeover contact. The relay coils are supplied with power from the output current path (I_{OUT}).

The solid-state relay output module EP-2814 uses four semiconductor switches to control up to 4 discrete outputs, each with a maximum of 0.5 A at 255 V AC. The switching characteristics of the semiconductor switch have it as being closed when the voltage crosses zero and open when the current crosses zero. Each connector features a potential-free NO (Normally Open) contact.

The wiring connectors on each module are color coded for ease of wiring. Refer to the section, *Field Wiring* for additional information.

Each module features a type plate, which includes identification information, the key technical specifications, and a block diagram. In addition, a QR code allows for direct online access to the associated documentation. The software for reading the QR code must support inverted QR codes.

Markers are available as accessories for labelling equipment. Each I/O module can be labelled using the markers to ensure clear identification when replacing individual modules or electronic units.

A green *Module Status* LED indicates there is communication on the system bus. Additionally, there are Yellow LEDs for each input to indicate when it is active. Refer to the section, *LEDs* for additional information.

The RSTi-EP station is usually installed on a horizontally positioned DIN rail. Installation on vertically positioned DIN rails is also possible.

Modules should to be allowed to de-energize for a minimum 10 seconds after power down, prior to starting any maintenance activity.

Refer to the *RSTi-EP Slice I/O Module User Manual* (GFK-2958) for additional information.

Refer to the *RSTi-EP Power Supply Reference Guide*, a software utility available on PME V9.00, for detailed power-feed requirements.

Module Features

- Positive Logic
- EP-2634 also supports Negative Logic
- *Spring style* technology for ease of wiring
- DIN rail mounted
- Double-click installation for positive indication of correct installation
- Up to 16 outputs
- Compatible with type-1 and type-3 sensor inputs
- Supports hot insertion and extraction

Ordering Information

Module	Description
EP-2214	Digital Output, 4 Points, Positive Logic 24VDC, 0.5A, 2,3, or 4 Wire
EP-2218	Digital Output, 8 Points, Positive Logic, 24VDC, 0.5A, 2 Wire
EP-2614	Digital Output, 4 Points, Positive Logic 24VDC, 2.0A, 2,3, or 4 Wire
EP-225F	Digital Output, 16 Points, Positive Logic, 24VDC, 0.5A, 1 Wire
EP-2634	Digital Output, 4 Points, Positive/Negative Logic 24VDC, 2.0A, 2,3, or 4 Wire
EP-2714	Digital Relay Output, 4 Points, Positive Logic, 24 - 220 VDC/VAC, 6A, 2 Wire
EP-2814	Digital Output, 4 Points, Positive Logic, 230 VAC, 1A

Specifications

	EP-2214	EP-2614	EP-2634	EP-2218	EP-225F
System Data					
Data	Process, parameter and diagnostic data depend on the network adapter used.				
Interface	RSTi-EP system bus				
System bus transfer rate	48 Mbps				
Outputs					
Number	4	4	4	8	16
Type	P-Logic		Switchable P- or N-Logic	P-Logic	
Type of load	ohmic, inductive, lamp load				
Response time	low » high max. 100 µs; high » low max. 250 µs				
Max. output current					
per channel	0.5 A	2 A	2 A	0.5 A	0.5 A
per module	2 A	8 A	8 A	4 A	8 A
Breaking energy (inductive)	150 mJ per channel				
Switching frequency					
Resistive load (min. 47 Ω)	1 kHz				
Inductive load (DC 13)	0.2 Hz without free-wheeling diode 1 kHz with suitable free-wheeling diode				
Lamp load (12 W)	1 kHz				
Actuator connection	2-wire, 3-wire, 3-wire + FE			2-wire	1-wire
Actuator supply	max. 2 A per plug, total max. 8 A			--	--
Short-circuit-proof	Yes				
Protective circuit	Constant current with thermal switch-off and automatic restart				
Response time of the current limiting circuit	< 100 µs				
Module diagnostics	Yes				
Individual channel diagnostics	No				
Reactionless	Yes	--	Yes	Yes	Yes
Can be used with EP-19xx	Yes	Yes	Yes	--	--

	EP-2214	EP-2614	EP-2634	EP-2218	EP-225F
Supply					
Supply voltage	20.4V – 28.8V				
Current consumption from system current path I_{SYS}	8 mA				
Current consumption from output current path I_{OUT}	20 mA + load	25 mA + load	20 mA + load	35 mA + load	25 mA + load
General data					
Operating temperature	-20°C to +60°C (-4 °F to +140 °F)				
Storage temperature	-40°C to +85°C (-40 °F to +185 °F)				
Air humidity (operation/transport)	5% to 95%, noncondensing as per IEC 61131-2				
Width	11.5 mm (0.45 in)				
Depth	76 mm (2.99 in)				
Height	120 mm (4.72 in)				
Weight	86 g (3.03 oz)	86 g (3.03 oz)	86 g (3.03 oz)	86 g (3.03 oz)	83 g (2.93 oz)

	EP-2714	EP-2814
System Data		
Data	Process, parameter, and diagnostic data depend on the network adapter used.	
Interface	RSTi-EP system bus	
System bus transfer rate	48 Mbps	
Outputs		
Number	4	
Type	Relay from - C	SSR / triac
Material for power and data contacts	Ni-Au, 3 µm	--
Switching characteristic	--	Closing when the voltage crosses zero, Opening when the current crosses zero
Response time	20 ms	10 ms
Minimum switching current	--	50 mA per channel
Maximum switching current	--	1 A per channel
	--	4 A per module
Max. output current	5 A at 60°C (140 °F) / 6 A at 55°C (131 °F) per channel	--
	20 A at 60°C (140 °F) / 24 A at 55°C (131 °F) per module	--
Holding current	--	25 mA
Switching frequency	max. 5 Hz	up to 20 Hz
Short-circuit-proof	No	
Defined trip behaviour of the prescribed external fuse	--	1 A super quick-acting
Protective circuit	External fusing with 6 A prescribed	--
Service life with AC-15 load and 1-A switching current	> 300.000 switching cycles	--
Max. switching voltage	255 V AC, UL: 277 V AC, DC corresponding to the derating curve	255 V AC, UL: 277 AC
Reactionless	Yes	

	EP-2714	EP-2814
Diagnosis		
Module diagnosis	Yes	
Individual channel diagnostics	No	
Supply		
Supply voltage	20.4V – 28.8V	
Current consumption from system current path I_{SYS}	8 mA	11 mA
Current consumption from output current path I_{OUT}	20 mA	--
General data		
Operating temperature	-20°C to +60°C (-4 °F to +140 °F)	
Storage temperature	-40°C to +85°C (-40 °F to +185 °F)	
Air humidity (operation/transport)	5% to 95%, noncondensing as per IEC 61131-2	
Width	11.5 mm (0.45 in)	
Depth	76 mm (2.99 in)	
Height	120 mm (4.72 in)	
Weight	83 g (2.93 oz)	

Current Demand for Digital Output Modules

Product	I_{SYS}	I_{IN}	I_{OUT}	I_S	I_L
EP-2214	8 mA	--	20 mA	--	x
EP-2614	8 mA	--	25 mA	--	x
EP-2714	8 mA	--	20 mA	--	--
EP-2814	11 mA	--	--	--	--
EP-2634	8 mA	--	20 mA	--	x
EP-2218	8 mA	--	35 mA	--	--
EP-225F	8 mA	--	25 mA	x	--

I_{SYS} Current consumption from the system current path
I_{IN} Power consumption from input current path
I_{OUT} Power consumption from output current path
I_S Current demand of the connected sensors
I_L Current demand of the connected actuators
x Must be included when calculating the power supply

LEDs

LED	EP-2214	EP-2614	EP-2634	EP-2218	EP-225F
Module Status	**Green:** Communication over the system bus **Red:** Module System Fault or Diagnostic Fault				
1.1	**Yellow:** Output 0 active	**Yellow:** Output 0 active	**Yellow:** Output 0 active	**Yellow:** Output 0 active	**Yellow:** Output 0 active
1.2	--	--	--	--	**Yellow:** Output 1 active
1.3	--	--	--	**Yellow:** Output 1 active	**Yellow:** Output 2 active
1.4	--	--	--	--	**Yellow:** Output 3 active
2.1	**Yellow:** Output 1 active	**Yellow:** Output 1 active	**Yellow:** Output 2 active	**Yellow:** Output 2 active	**Yellow:** Output 4 active
2.2	--	--	--	--	**Yellow:** Output 5 active
2.3	--	--	--	**Yellow:** Output 3 active	**Yellow:** Output 6 active
2.4	--	--	--	--	**Yellow:** Output 7 active
3.1	**Yellow:** Output 2 active	**Yellow:** Output 2 active	**Yellow:** Output 3 active	**Yellow:** Output 4 active	**Yellow:** Output 8 active
3.2	--	--	--	--	**Yellow:** Output 9 active
3.3	--	--	--	**Yellow:** Output 5 active	**Yellow:** Output 10 active
3.4	--	--	--	--	**Yellow:** Output 11 active
4.1	**Yellow:** Output 3 active	**Yellow:** Output 3 active	**Yellow:** Output 4 active	**Yellow:** Output 6 active	**Yellow:** Output 12 active
4.2	--	--	--	--	**Yellow:** Output 13 active
4.3	--	--	--	**Yellow:** Output 7 active	**Yellow:** Output 14 active
4.4	--	--	--	--	**Yellow:** Output 15 active

LED	EP-2714	EP-2814
Module Status	**Green:** Communication over the system bus **Red:** No communication on system bus or diagnostic message displayed	**Green:** Communication over the system bus **Red:** Collective error diagnostic
1.1	**Yellow:** Output 0 active	**Yellow:** Output 0 active
1.2	--	--
1.3	--	--
1.4	--	--
2.1	**Yellow:** Output 1 active	**Yellow:** Output 1 active
2.2	--	--
2.3	--	--
2.4	--	--
3.1	**Yellow:** Output 2 active	**Yellow:** Output 2 active
3.2	--	--
3.3	--	--
3.4	--	--
4.1	**Yellow:** Output 3 active	**Yellow:** Output 3 active
4.2	--	--
4.3	--	--
4.4	--	--

Field Wiring

The connection frame can take up to four connectors, and four wires can be connected to each connector. The *Spring style* technology allows for either finely stranded or solid wire with crimped wire-end ferrules or ultrasonically welded wires, each with a maximum cross-section of 1.5 mm² (16 guage), to be inserted easily through the opening in the clamping terminal without having to use tools. To insert fine stranded wires without wire-end ferrules, the pusher must be pressed in with a screwdriver and released to latch the wire.

Connector with Four Wire Connectors

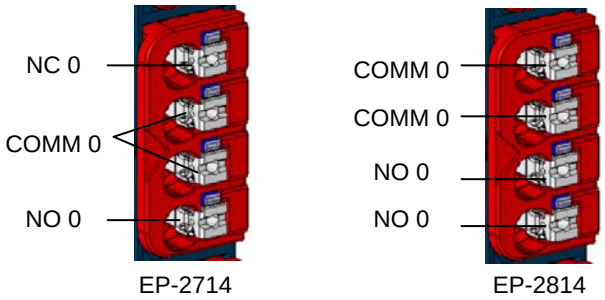

COMM 0 Connector Block (for Relay/SSR Modules)

Connector Specifications:

- wire cross-section 0.14 to 1.5 mm² (26 – 16 guage)
- max. ampacity: 10 A
- 4-pole

The pushers are color-coded for the following connections:

- White Signal
- Blue GND
- Red 24 V DC
- Green Functional earth (FE)

The modules do not have a fused sensor/activator power supply. All cables to the connected sensors/actuators must be fused corresponding to their conductor cross-sections (as per Standard DIN EN 60204-1, section 12).

Refer to the *RSTi-EP Slice I/O Module User Manual* (GFK-2958) for additional information.

For technical assistance, go to http://support.ge-ip.com.

Connection Diagrams

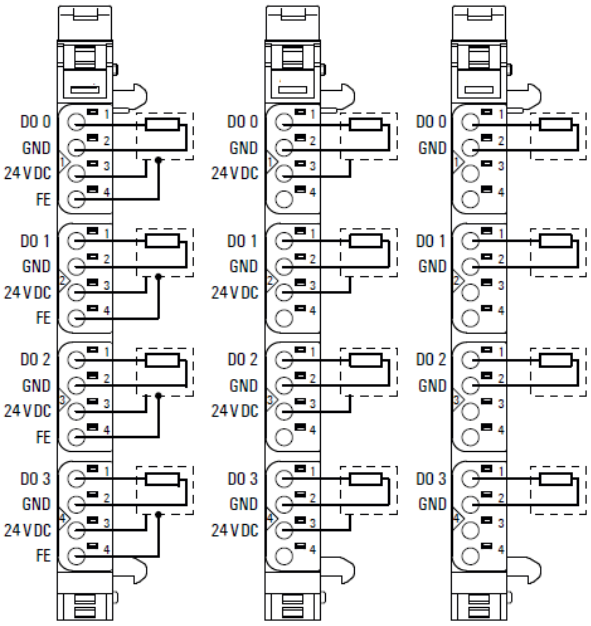

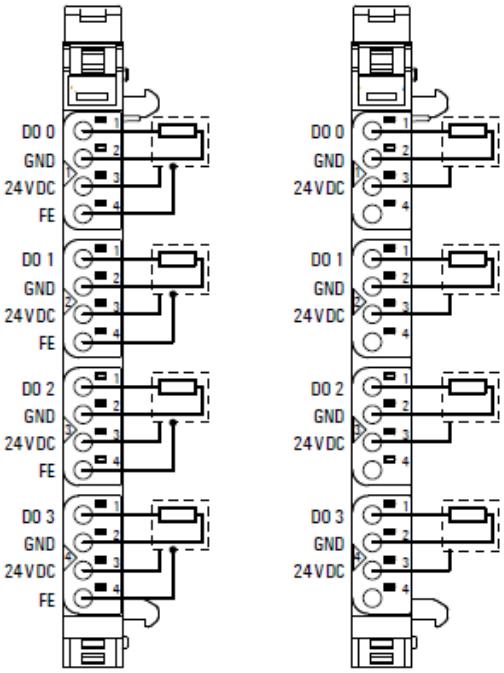

EP-2214 and EP-2614

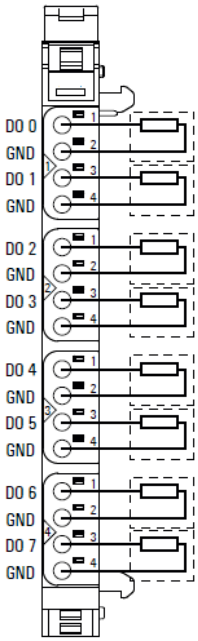

EP-2218

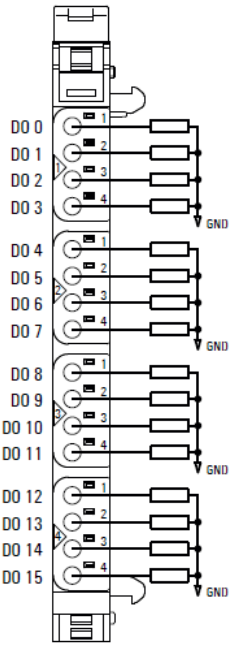

EP-225F

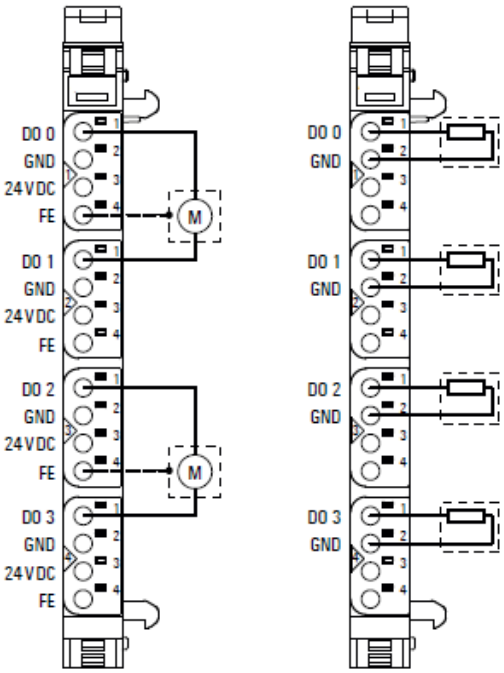

EP-2634

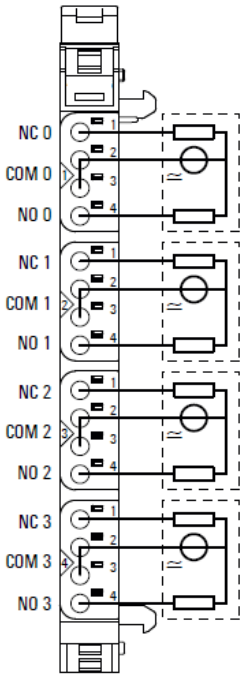

EP-2714

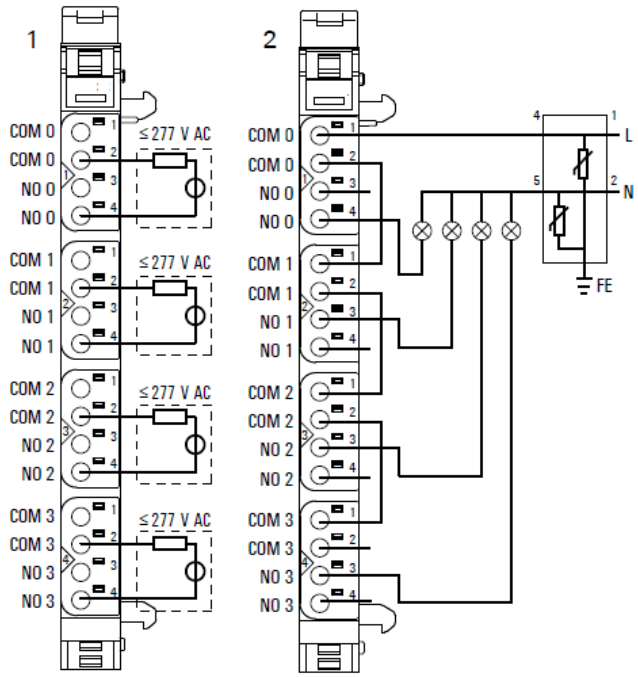

EP-2814

Connection Block Diagrams

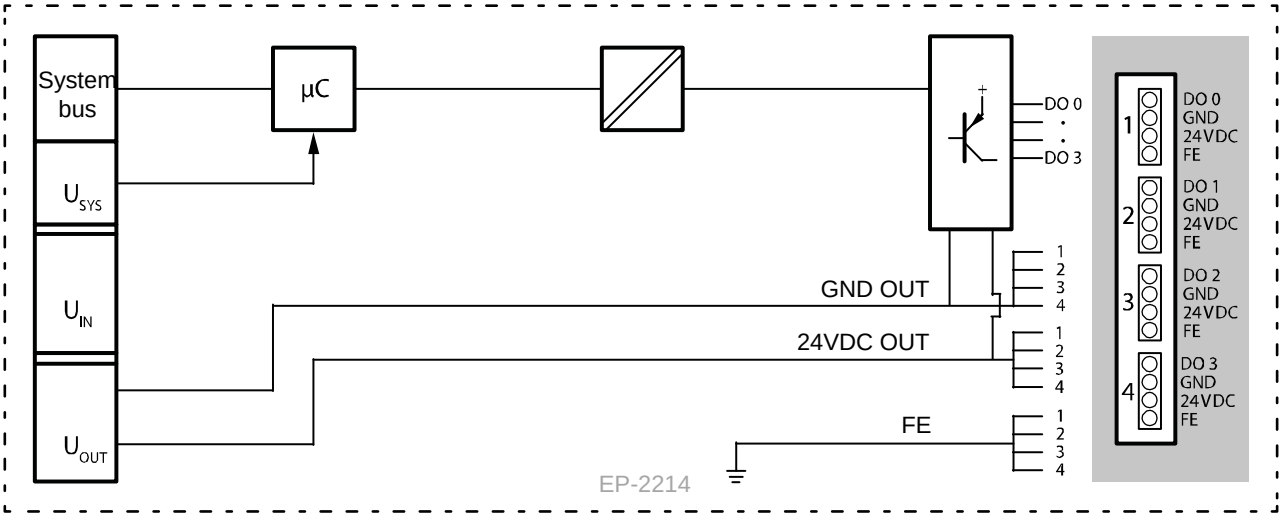

EP-2214

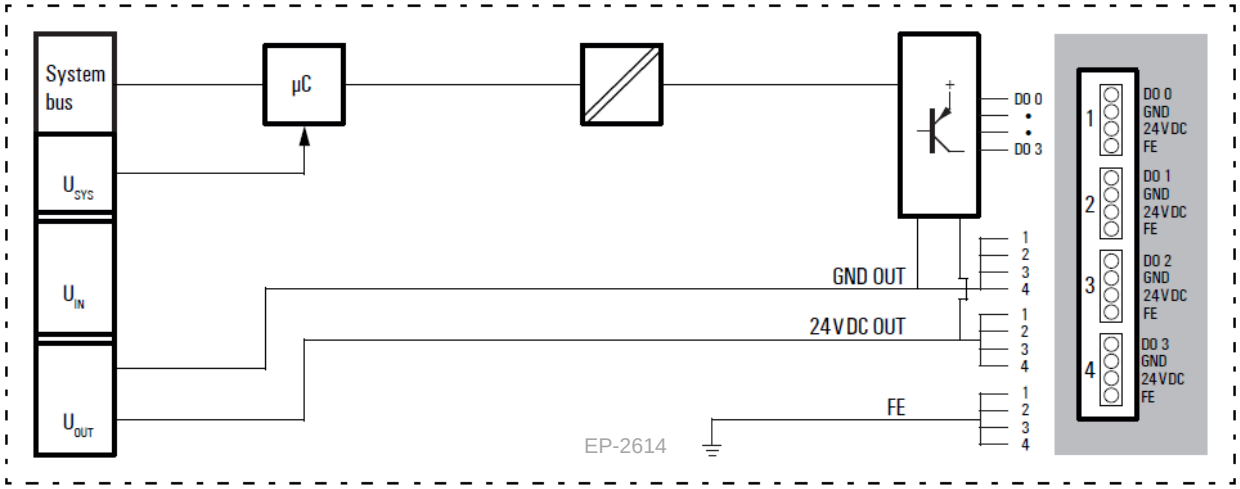

EP-2614

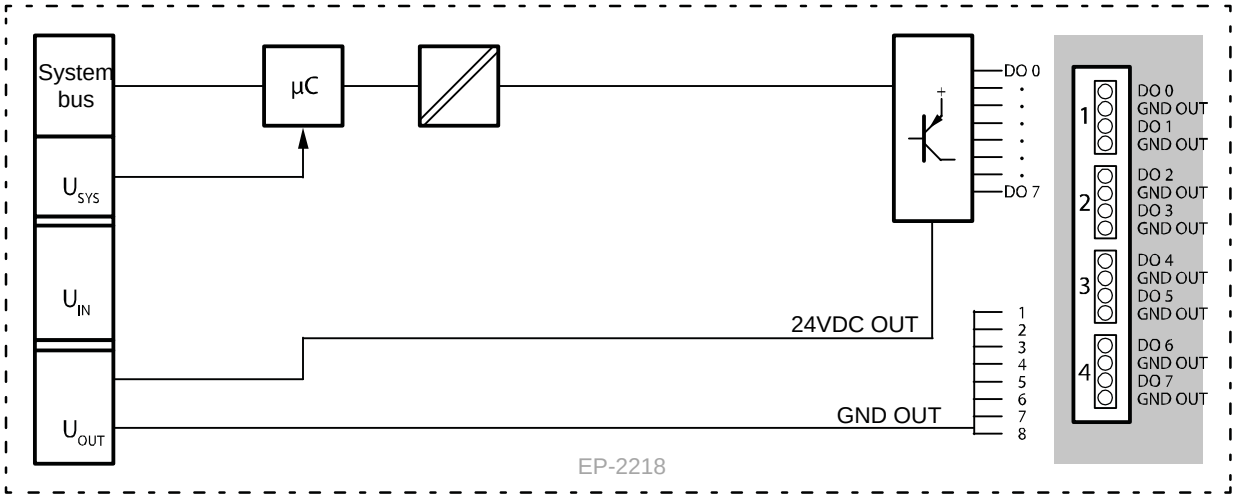

EP-2218

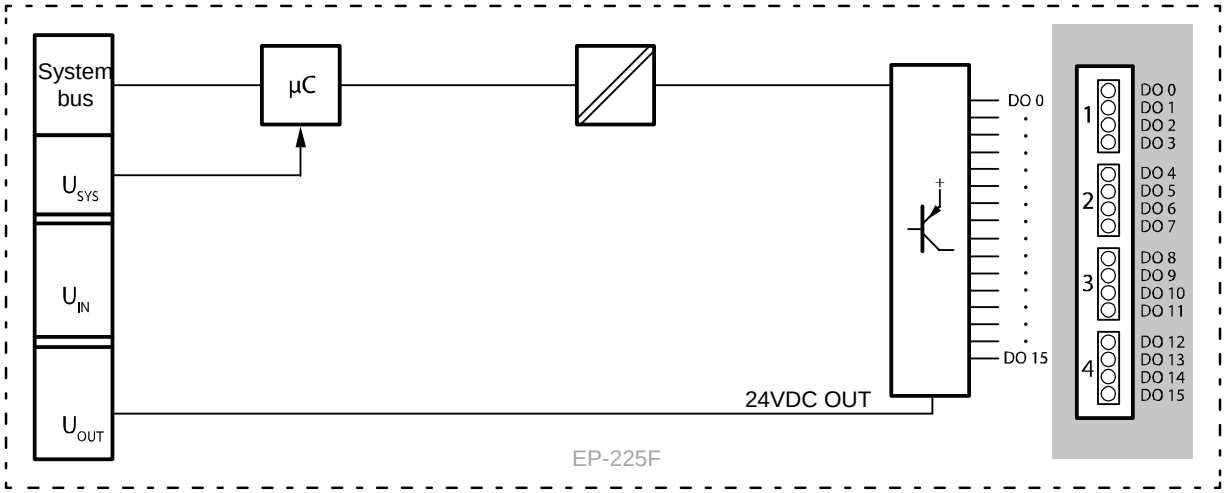

EP-225F

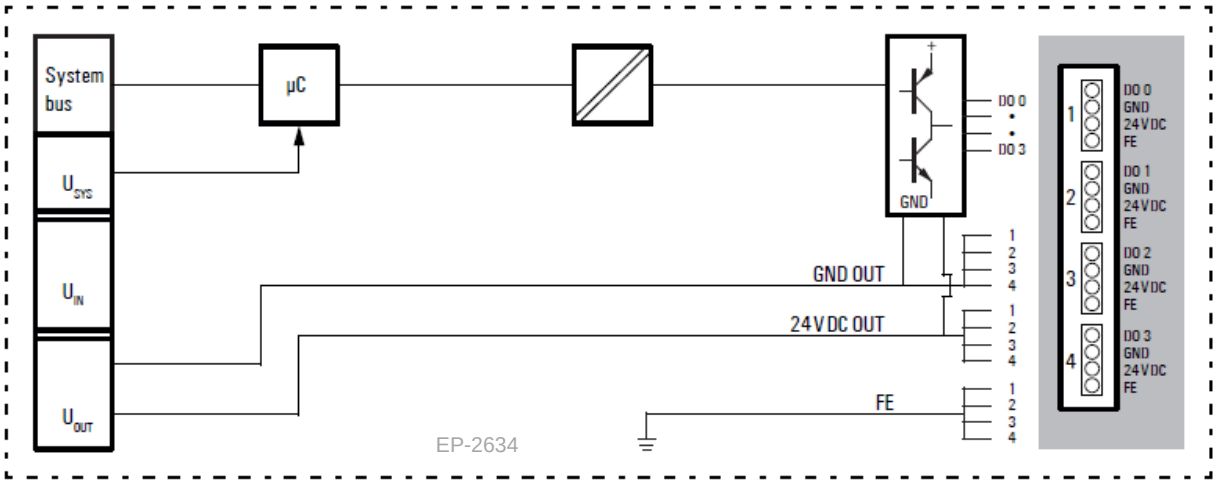

EP-2634

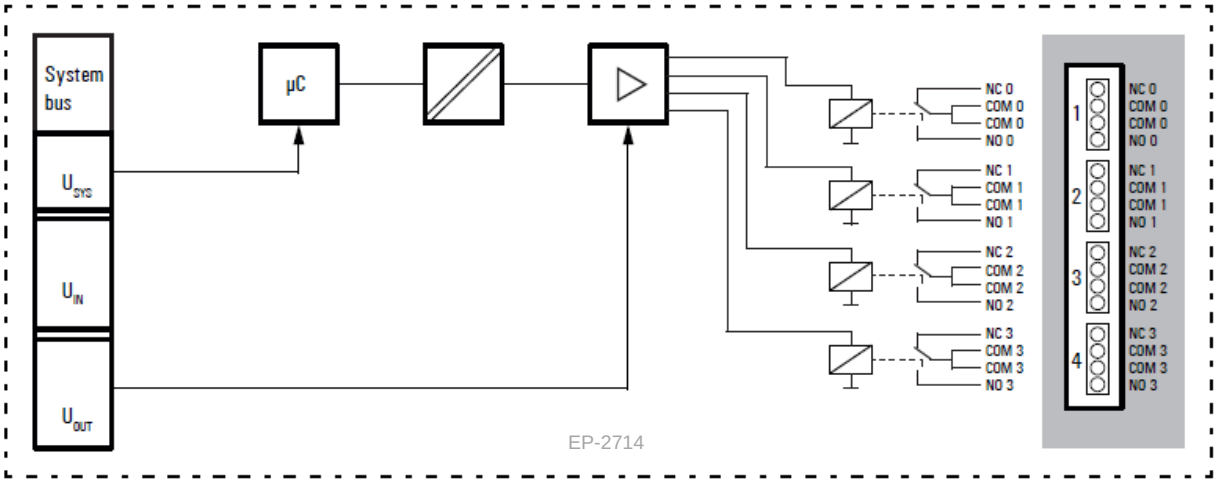

EP-2714

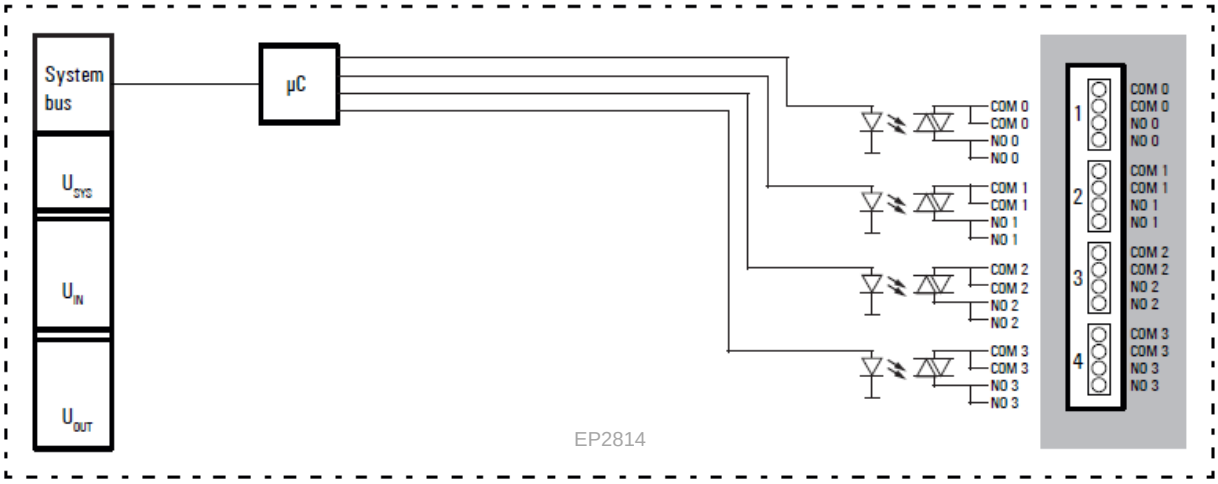

EP-2814

Installation in Hazardous Areas

- EQUIPMENT LABELED WITH REFERENCE TO CLASS I, GROUPS A, B, C & D, DIV. 2 HAZARDOUS AREAS IS SUITABLE FOR USE IN CLASS I, DIVISION 2, GROUPS A, B, C, D OR NON-HAZARDOUS AREAS ONLY

WARNING - EXPLOSION HAZARD - SUBSTITUTION OF COMPONENTS MAY IMPAIR SUITABILITY FOR CLASS I, DIVISION 2;

WARNING - EXPLOSION HAZARD - WHEN IN HAZARDOUS AREAS, TURN OFF POWER BEFORE REPLACING OR WIRING MODULES; AND

WARNING - EXPLOSION HAZARD - DO NOT CONNECT OR DISCONNECT EQUIPMENT UNLESS POWER HAS BEEN SWITCHED OFF OR THE AREA IS KNOWN TO BE NONHAZARDOUS.

ATEX Marking

Ex II 3 G Ex nA IIC T4 Gc

Ta: -20°C to +60°C (-4° F to +140 °F)

Release History

Catalog Number	*Firmware Version*	*Date*	*Comments*
EP-2214, EP-2614, EP-2634, EP-2218, EP-225F, EP2714, EP-2814	N/A	Dec-2015	Documentation update only
EP-2214, EP-2614, EP-2634, EP-2218, EP-225F, EP2714, EP-2814	N/A	Oct-2015	Initial Release

Important Product Information for this Release

Updates

None - Documentation update only

Funcional Compatibility

N/A

Problems Resolved by this Release

None – Documentation update only

New Features and Enhancements

None – Documentation update only

GFK-2959

Known Restrictions and Open Issues

Subject	Description
Logging of multiple fault entries when using discrete output modules under output short-circuit or overload condition	Discrete output modules (EP-2214, EP-2218 and EP-225F) offer output short circuit protection. When the short circuit/ overload (>2A) condition appears, the output is turned off. Diagnostic alarm is generated. Periodically the output is pulsed to check the fault status and this is continued until the short-circuit or overload condition is rectified. The average output current will be there in the output path however it will be very less as compared to the amplitude of regular load current. Please review your system design to determine if the periodic pulsing in overload condition is compatible with selected load components for your application This behavior has the side-effect of the affected module logging repeated diagnostic messages until the error condition is cleared, this may cause multiple fault table entries when used with RX3i control and PNC.

Operational Notes

None

Product Documentation

RSTi-EP Slice I/O Module User Manual (GFK-2958)

RSTi-EP Slice I/O Functional Safety Module User Manual (GFK-2956)

1-800-433-2682

1-434-978-5100

www.ge-ip.com