Instructions,
Model IPC Splashproof Cover

IPC Overview

Model IPC Splashproof Cover is a rugged, impact resistant, clear lens that fits over a 1/8 DIN instrument to make it dust and waterproof from the front of the panel. Sealing meets NEMA 12 (IP52) standards for water splash and dust protection when the hinged door is snapped in place. Sealing meets NEMA 4 (IP67) standards for hose-directed water when the hinged door is further clamped down by a provided locking key.

A capillary seal is formed between the door and the base by a tapered recess in the door and a tapered ridge in the base. Capillary action causes a small amount of water to be drawn in between the two surfaces, thereby producing a water-tight film around the sealing area. For applications where fluid residues not acceptable, such as food processing, apply a light coating of clear silicone grease, or other approved sealant, to the mating groove to prevent any ingress of liquid and enable the cover to withstand steam cleaning.

The door is latched against the base by a locking tab when the door is snapped shut. Positive clamping of the door and protection against opening of the locking tab by hose-directed water are provided by a locking key, which remains in place to provide a much higher clamping force than the tab alone.

Model IPC fits all Laurel 1/8 DIN instruments as well as 1/8 DIN instruments by other manufacturers, provided that instrument dimensions in front of the panel do not exceed 48 x 96 x 15 mm (1.89" x 3.78" x 0.59"). It can be purchased as an add-on option for new instruments, or be fitted to existing installations.

IPC Installation

1. Ensure that the panel has a 1/8 DIN, 45 x 92 mm (1.77" x 3.62") cutout. Verify that the meter fits.
2. For a smooth panel, create an O-ring seal by inserting the provided gasket string in the groove in the back of the base. Cut the string to length so that the two ends meet. Compression will press the two ends against each other.
3. For a textured panel, affix the provided self-adhesive neoprene gasket to the back of the base instead of using the O-ring seal.
4. Orient base with the hinge to the right or to the left, as desired.
5. Insert the meter through the base, and place the door hinge in the base.
6. Insert the meter with the IPC assembly into the panel, and tighten the meter in the usual manner. This will press the base against the panel to create a seal.

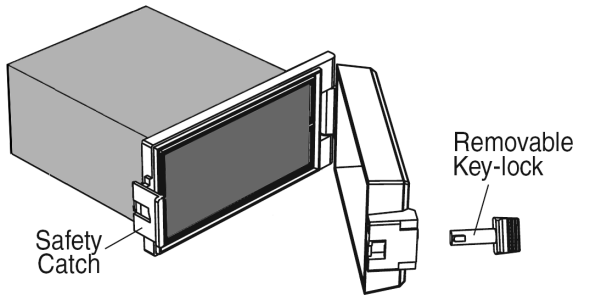

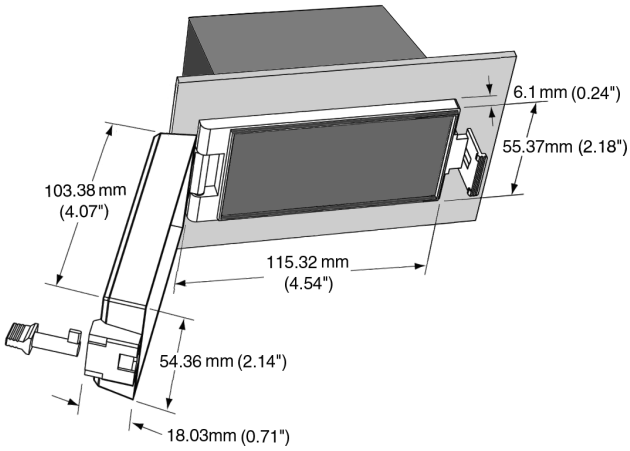

IPC Usage

1. For a NEMA 12 (IP52) seal, simply snap the door shut. To open the door, use your thumb to pry back the latch.
2. For a NEMA 4 (IP67) seal smooth panel, insert the provided locking key into the keyhole in the door and rotate by 90°. Keep the rotated key in place to maintain a continual clamping force.

Specifications

Panel cutout	1/8 DIN, 45 x 92 mm (1.77" x 3.62")
Base dimensions	115.3 x 55.4 x 6.1 mm (4.54" x 2.18" x 0.25")
Door dimensions	103.4 x 54.4 x 18 mm (4.07" x 2.14" x 0.71")
Overall depth	23.8 mm (0.94")
Base-to-panel seal	O-ring or adhesive-backed gasket (provided)
Door-to-base seal	Capillary seal
Material, base & door	Transparent polycarbonate
Corrosion resistance	No metal parts
Sealing level	NEMA 12 (IP52) without locking key NEMA 4 (IP67) with locking key in place

LAUREL ELECTRONICS INC.
3183-G Airway Ave., Costa Mesa, CA 92626, USA

Tel: 714-434-6131
Fax: 714-434-3766

Email: sales@laurels.com
Web: www.laurels.com