Series DH3

Digihelic® Differential Pressure Controller

Digihelic® Controller in Photohelic® Gage, Square Root Output for Flow

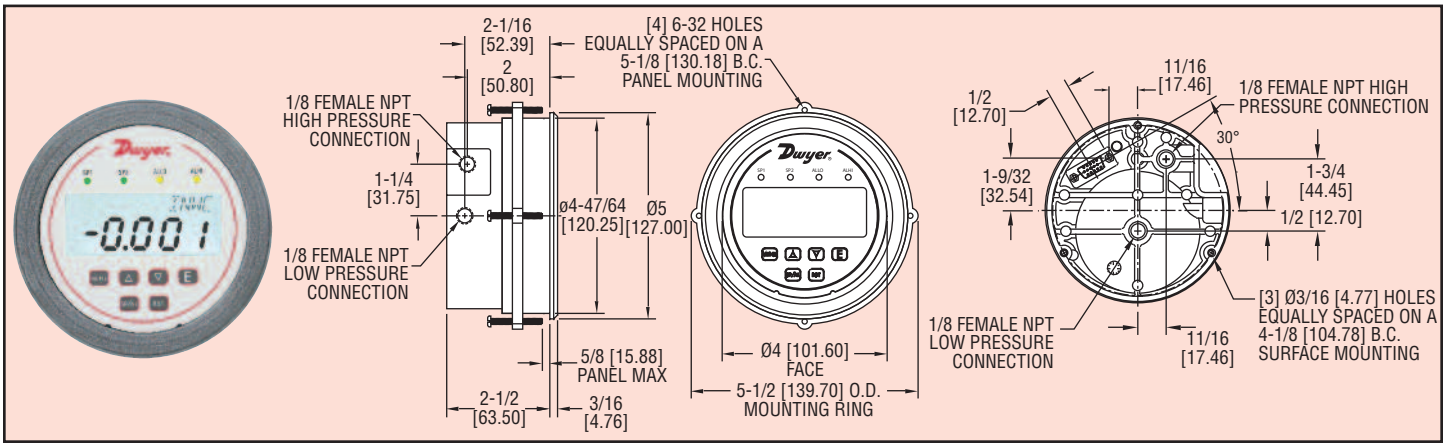

The Series DH3 Digihelic® Differential Pressure Controller is a 3 in 1 instrument possessing a digital display gage, control relay switches, and a transmitter with current output all packed in the popular Photohelic® gage style housing. Combining these 3 features allows the reduction of several instruments with one product, saving inventory, installation time and money. The Digihelic® controller is the ideal instrument for pressure, velocity and flow applications, achieving a 1% full scale accuracy on ranges down to the extremely low 0.25 in w.c. to 2.5 in w.c. full scale. Ranges of 5 in w.c. and greater maintain 0.5% F.S. accuracy. Bi-directional ranges are also available.

The Series DH3 Digihelic® controller allows the selection of pressure, velocity or volumetric flow operation in several commonly used engineering units. 2 SPDT control relays with adjustable deadbands are provided along with a scalable 4-20 mA process output.

Programming is easy using the menu key to access 5 simplified menus which provide access to: security level; selection of pressure, velocity or flow operation; selection of engineering units; K-factor for use with flow sensors; rectangular or circular duct for inputting area in flow applications; set point control or set point and alarm operation; alarm operation as a high, low, or high/low alarm; automatic or manual alarm reset; alarm delay; view peak and valley process reading; digital damping for smoothing erratic process applications; scaling the 4-20 mA process output to fit your applications range and field calibration.

APPLICATIONS

- SCFM flow in ducts
- Filter status
- Static pressures in ducts or buildings
- Damper control
- Fan control

Model	Ranges
DH3-002	0-0.25 in w.c.
DH3-003	0-0.5 in w.c.
DH3-004	0-1 in w.c.
DH3-005	0-2.5 in w.c.
DH3-006	0-5 in w.c.
DH3-007	0-10 in w.c.
DH3-009	0-25 in w.c.
*DH3-010	0-50 in w.c.
*DH3-011	0-100 in w.c.
*DH3-013	0.25-0-0.25 in w.c.
*DH3-014	0.5-0-0.5 in w.c.
*DH3-015	1-0-1 in w.c.
*DH3-016	2.5-0-2.5 in w.c.
*DH3-017	5-0-5 in w.c.
*DH3-018	10-0-10 in w.c.

*Velocity and volumetric flow not available on bi-directional range units and models DH3-010 and DH3-011.

SPECIFICATIONS

Service: Air and non-combustible, compatible gases.
Wetted Materials: Consult factory.
Housing Material: Die cast aluminum case and bezel.
Accuracy: ±1.5% for 0.25″ and ±0.25″ w.c. ranges. Ranges 0.5″ to 5″ w.c. and corresponding bi-directional (except ±2.5″ w.c.) ±1%; All other ranges: ±0.5% @ 77°F (25°C) including hysteresis and repeatability (after 1 hour warm-up).
Stability: < ±1% per year.
Pressure Limits: Ranges ≤ 2.5 in w.c.: 25 psi; ±2.5″, 5 in w.c.: 5 psi; 10 in w.c.: 5 psi; 25 in w.c.: 5 psi; 50 in w.c.: 5 psi; 100 in w.c.: 9 psi.
Temperature Limits: 32 to 140°F (0 to 60°C).
Compensated Temperature Limits: 32 to 140°F (0 to 60°C).
Thermal Effects: 0.020%/°F (0.036/°C) from 77°F (25°C). For 0.25″ and ±0.25″ w.c. ranges: ±0.03%/°F (±0.054%/°C).
Power Requirements: 12-28 VDC, 12-28 VAC 50 to 400 Hz.
Power Consumption: 3 VA max.
Output Signal: 4-20 mA DC into 900 ohms max.
Zero & Span Adjustments: Accessible via menus.
Response Time: 250 ms (damping set to 1).
Display: Backlit 4 digit LCD 0.4″ height LED indicators for set point and alarm status.
Electrical Connections: 15 pin male high density D-sub connection. 18″ (46 cm) cable with 10 conductors included. 4′ and 10′ cables available.
Process Connections: 1/8″ female NPT. Side or back connections.
Mounting Orientation: Mount unit in vertical plane.
Size: 5″ (127 mm) OD x 3-1/8″ (79.38 mm).
Weight: 1.75 lb (794 g).
Agency Approvals: CE.

SWITCH SPECIFICATIONS

Switch Type: 2 SPDT relays.
Electrical Rating: 1 amp @ 30 VAC/VDC.
Set Point Adjustment: Adjustable via keypad on face.

ACCESSORIES

A-298, Flat Aluminum Bracket for flush mounting
A-301, Static Pressure Tip for 1/4″ metal tubing connection
A-302, Static Pressure Tip for 3/16″ and 1/8″ I.D. plastic or rubber tubing
A-302F-A, 303 SS Static Pressure Tip with mounting flange. For 3/16″ ID rubber or plastic tubing. 4″ insertion depth. Includes mounting screws
A-370, Mounting Bracket flush mount bracket. Bracket is then surface mounted. Steel with gray hammertone epoxy finish
A-489, 4″ Straight Static Pressure Tip with Flange

OPTIONS

For NIST traceable calibration certificate, add suffix -NIST to model numbers.
Example DH3-004-NIST.
For factory calibration certificate, add suffix -FC to model numbers.
Example DH3-004-FC.

See page 567 for process tubing options.