Technical Information
Memosens CLS82D

Hygienic conductivity sensors, digital with Memosens technology, cell constant k = 0.57 cm^{-1}

Application

For measurements where very diverse conductivities must be measured by one measuring system.

Typical applications include:
- Phase separations
- Chromatography
- Fermentations
- CIP monitoring in small pipes
- Ultrafiltration

Your benefits

- High measuring accuracy as cell constant is individually measured
- Quality certificate stating the individual cell constant
- Hygienic process connections for installation in pipes or flow vessel
- IP68 protection
- Easy to clean thanks to electropolished surfaces
- Can be sterilized up to 140 °C (284 °F)
- Stainless steel 1.4435 (AISI 316L) meets the highest demands of the pharmaceutical industry
- The entire sensor is EHEDG- and 3A-certified
- FDA conformity

Other advantages of Memosens technology

- Maximum process safety thanks to non-contact, inductive signal transmission
- Data security thanks to digital data transmission
- Very easy to use as sensor data saved in the sensor
- Recording of sensor load data in the sensor enables predictive maintenance

Endress+Hauser
People for Process Automation

Function and system design

Measuring principle

The measuring cell has four electrodes. An alternating current is applied via the outer electrode pair. At the same time, the voltage applied is measured at the two inner electrodes. The electrolytic conductivity between the electrodes can be reliably established based on the measured voltage and the current flow caused by the liquid's resistance. The advantage of this technology compared to traditional two-electrode sensors is that electrochemical effects at the live electrodes are suppressed by the two additional voltage measuring electrodes.

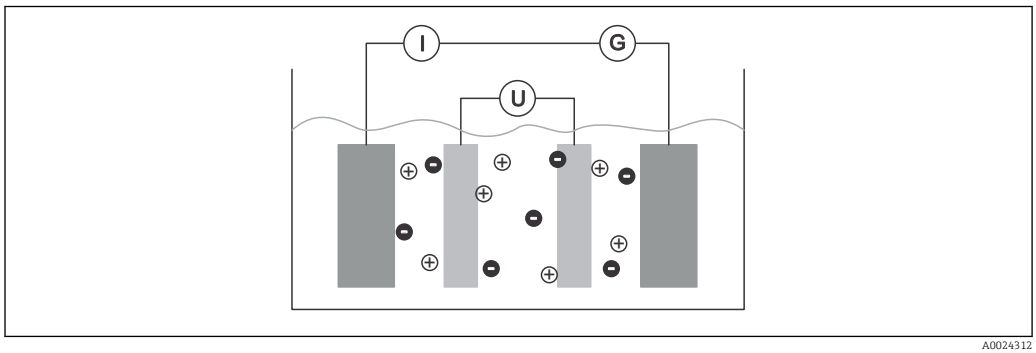

A0024312

1 Conductivity measurement

I Current intensity measurement
U Voltage measurement
G Generator

Measuring system

A complete measuring system consists of the following components at least:
- Conductive conductivity sensor CLS82D
- A transmitter, e.g. Liquiline CM44x
- A Memosens data cable CYK10

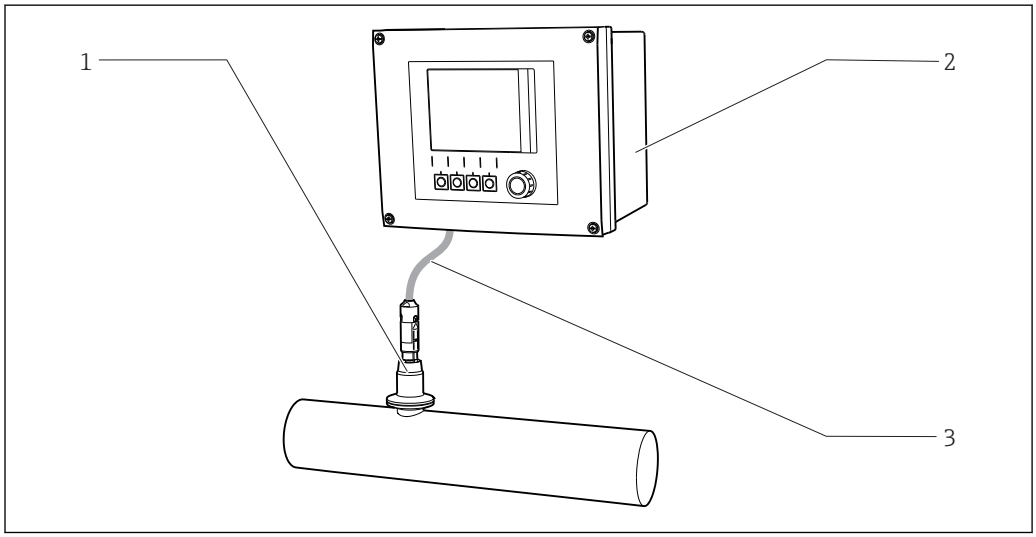

A0024179

2 Example of a measuring system

1 Memosens CLS82D
2 Liquiline CM44x transmitter
3 Measuring cable

General properties

Temperature measurement
In addition, a temperature probe is fitted in the sensor element to measure the temperature.

Communication and data processing

Communication with the transmitter

Always connect digital sensors with Memosens technology to a transmitter with Memosens technology. Data transmission to a transmitter for analog sensors is not possible.

Digital sensors can store measuring system data in the sensor. These include the following:
- Manufacturer data
  - Serial number
  - Order code
  - Date of manufacture
- Calibration data
  - Calibration date
  - Cell constant
  - Delta cell constant
  - Number of calibrations
  - Serial number of the transmitter used to perform the last calibration
- Operating data
  - Temperature application range
  - Conductivity application range
  - Date of initial commissioning
  - Maximum temperature value
  - Hours of operation at high temperatures

Reliability

Dependability

Memosens technology digitizes the measured values in the sensor and transmits the data to the transmitter using a non-contact connection that is free from potential interference. The result:
- Automatic error message if sensor fails or connection between sensor and transmitter is interrupted
- Immediate error detection increases measuring point availability

Serviceability

Easy handling
Sensors with Memosens technology have integrated electronics that store calibration data and other information (such as total hours of operation and operating hours under extreme measuring conditions). Once the sensor has been connected, the sensor data are transferred automatically to the transmitter and used to calculate the current measured value. As the calibration data are stored in the sensor, the sensor can be calibrated and adjusted independently of the measuring point. The result:
- Easy calibration in the measuring lab under optimum external conditions increases the quality of the calibration.
- Pre-calibrated sensors can be replaced quickly and easily, resulting in a dramatic increase in the availability of the measuring point .
- Maintenance intervals can be defined based on all stored sensor load and calibration data and predictive maintenance is possible.
- The sensor history can be documented on external data carriers and in evaluation programs. Thus, the current application of the sensors can be made to depend on their previous history.

Interference immunity

With inductive transmission of the measured value using a non-contact connection, Memosens guarantees maximum process safety and offers the following benefits:
- All problems caused by moisture are eliminated.
  - Plug-in connection remains free from corrosion
  - Measured value distortion from moisture is not possible.
  - The plug-in system can even be connected under water.
- The transmitter is galvanically decoupled from the medium.
- EMC safety is guaranteed by screening measures for the digital transmission of measured values.

Input

Measured variable	▪ Conductivity ▪ Temperature
Measuring range	**Conductivity** 1 µS/cm to 500 mS/cm **Temperature** -5 to 120 °C (23 to 248 °F)
Cell constant	CLS82D k = 0.57 cm^{-1}
Temperature compensation	Pt1000 (Class A according to IEC 60751)

Power supply

Electrical connection

The sensor is connected to the transmitter via measuring cable CYK10.

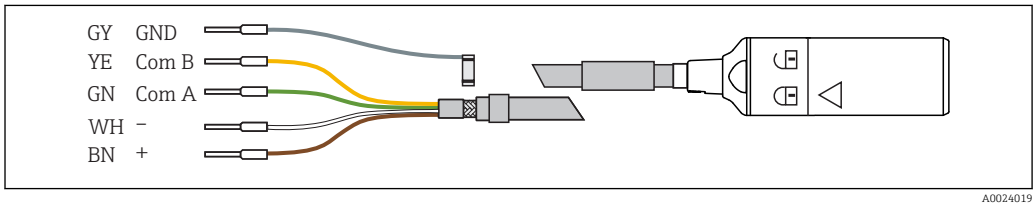

3 Measuring cable CYK10

Performance characteristics

Uncertainty of measurement	Each individual sensor is factory-measured in a solution of approx. 50 µS/cm using a reference measuring system traceable to NIST or PTB. The exact cell constant is entered into the quality certificate supplied. The uncertainty of measurement in determining the cell constant is 1.0 %.
Conductivity response time	$t_{90} \leq 3$ s
Temperature response time	$t_{90} \leq 25$ s
Maximum measured error	≤ 4 % of reading
Repeatability	0.2% of reading

Installation

Symmetrical installation is recommended in order to guarantee linearity. The distance to the side walls and opposite walls must be at least 15 mm.

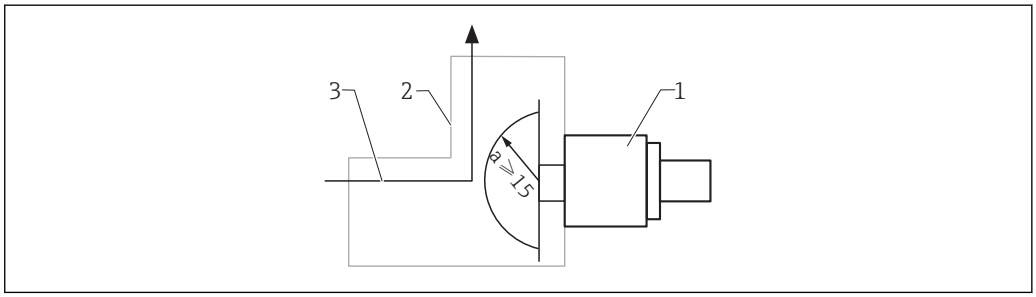

A0024621

4 Minimum distance between pipe and end of the measuring cell

1 Sensor CLS82D
2 Pipe
3 Direction of flow

The ionic current in the liquid is affected by the walls in confined installation conditions. This effect is compensated by what is referred to as the installation factor. The installation factor can be entered in the transmitter for the measurement or the cell constant is corrected by multiplying by the installation factor.

The value of the installation factor depends on the diameter and the conductivity of the pipe nozzle as well as the sensor's distance to the wall. The installation factor can be disregarded (f = 1.00) if the distance to the wall is sufficient (a > 15 mm). If the distance to the wall is smaller, the installation factor increases for electrically insulating pipes (f > 1) and decreases for electrically conductive pipes (f < 1). The installation factor can be determined using calibration solutions.

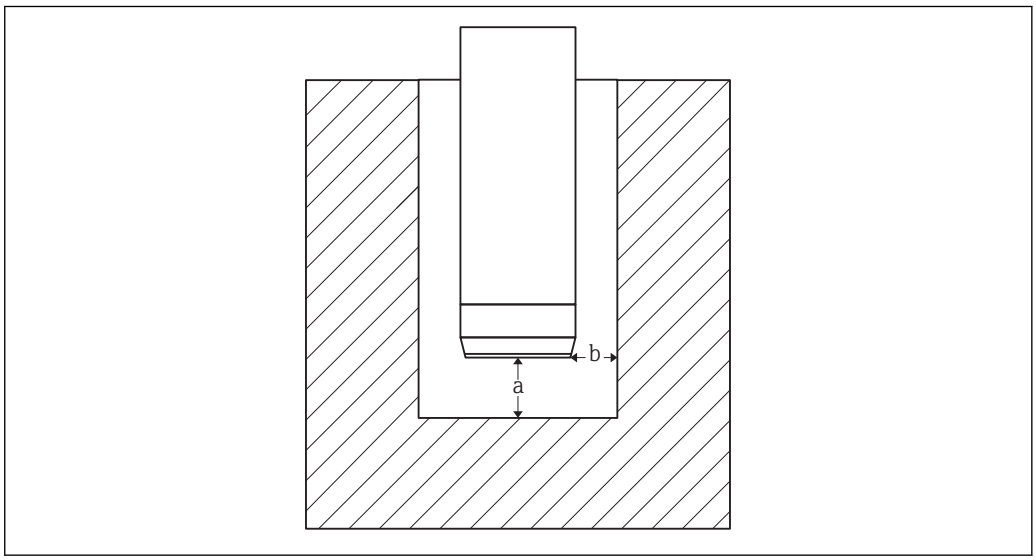

A0024626

5 Schematic drawing of the CLS82D in confined installation conditions

a Wall distance
b Gap width

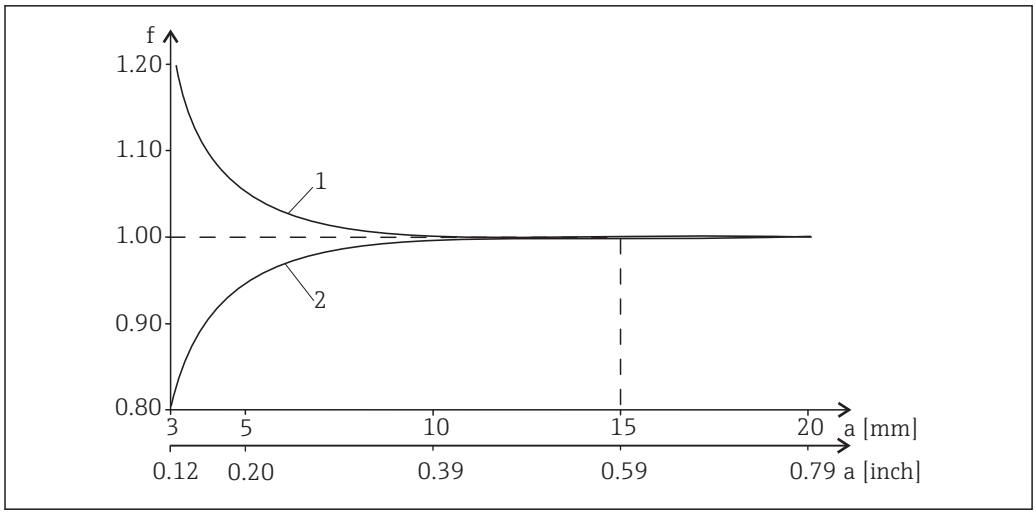

6 *Relationship between installation factor f and wall distance a*

1 *Electrically insulating pipe wall*
2 *Electrically conductive pipe wall*

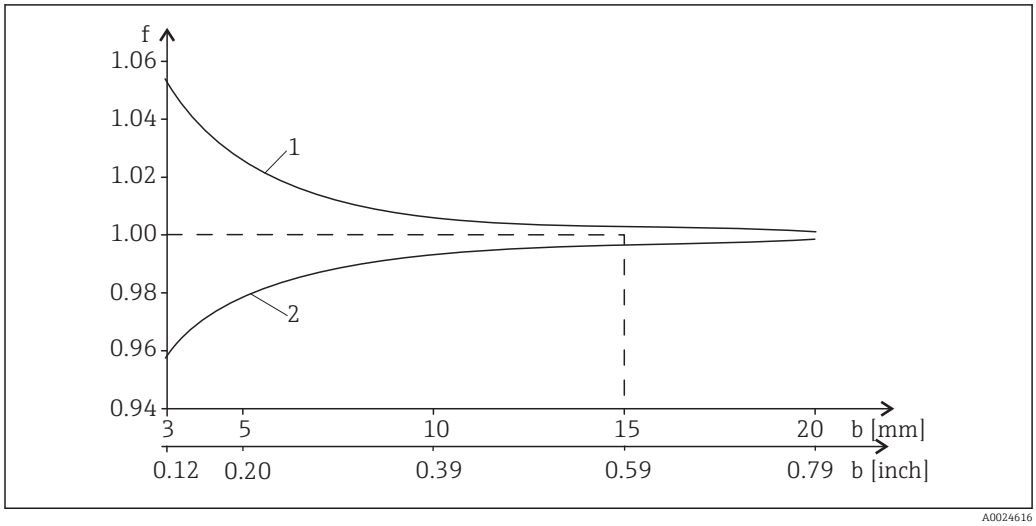

7 *Relationship between installation factor f and gap width b*

1 *Electrically insulating pipe wall*
2 *Electrically conductive pipe wall*

Hygienic properties

For a 3-A compliant installation, the following must be noted:

After the instrument is installed its hygienic integrity shall be maintained. All process connections must be 3-A compliant.

Environment

Ambient temperature range	-20 to +60 °C (-4 to 140 °F)
Storage temperature	-25 to +80 °C (-13 to +176 °F)
Humidity	5 to 95 %
Degree of protection	IP 68 / NEMA type 6P (1 m water column, 25 °C, 168 h)

Process

Process temperature

Normal operation:	-5 to 120 °C (23 to 248 °F)
Sterilization (max. 45 min.):	Max. 140 °C (284 °F) at 6 bar (87 psi)

The maximum temperature for communication with the transmitter is 130 °C (266 °F).

Process pressure (absolute)

17 bar (247 psi) at 20 °C (68 °F)

9 bar (131 psi) at 120 °C (248 °F)

Pressure-temperature ratings

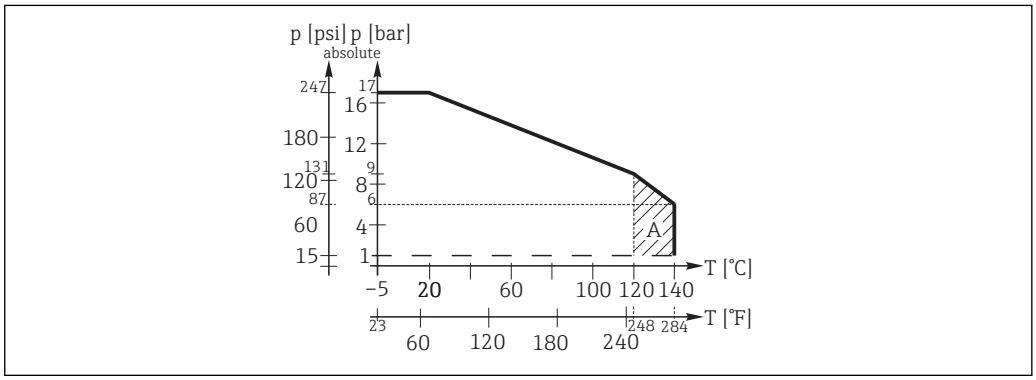

8 Pressure-temperature ratings

A Can be sterilized for a short time (45 min.)

Mechanical construction

Design, dimensions

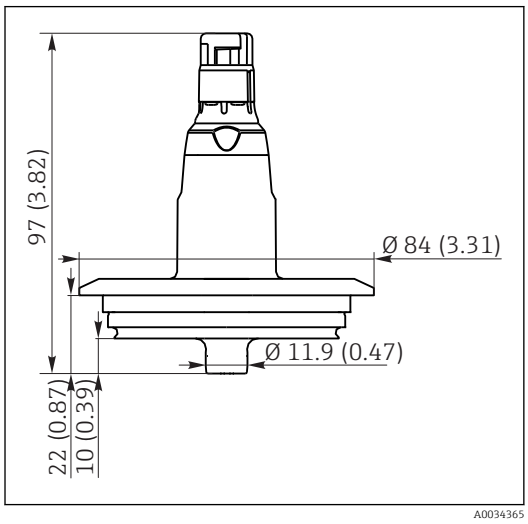

9 *Varivent N DN 40 - DN 125*

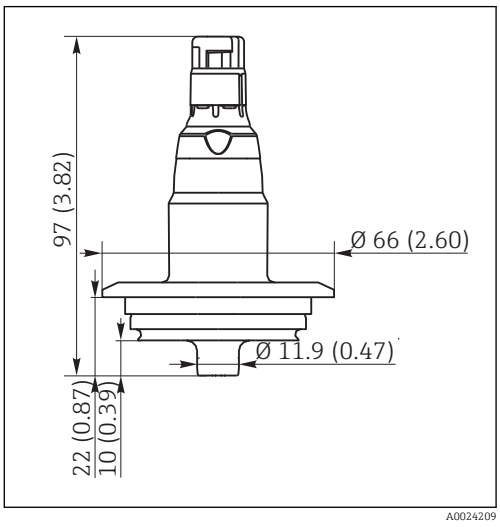

10 *Varivent F DN 25*

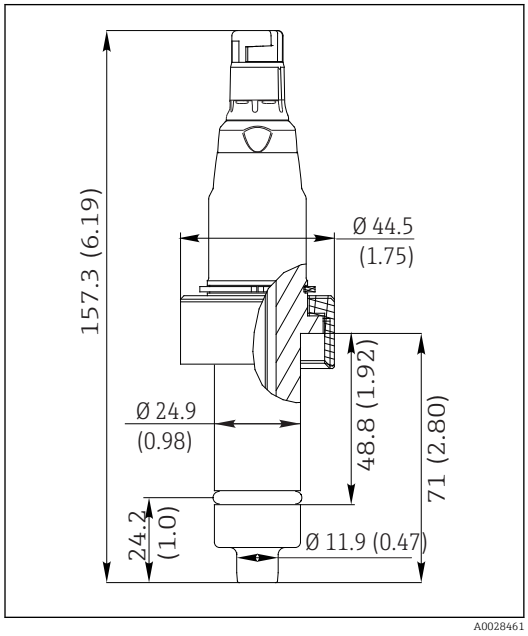

11 *DN 25 brown*

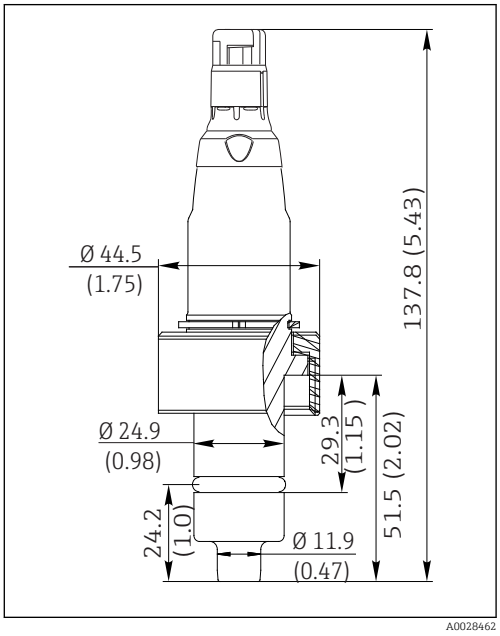

12 *DN 25 standard*

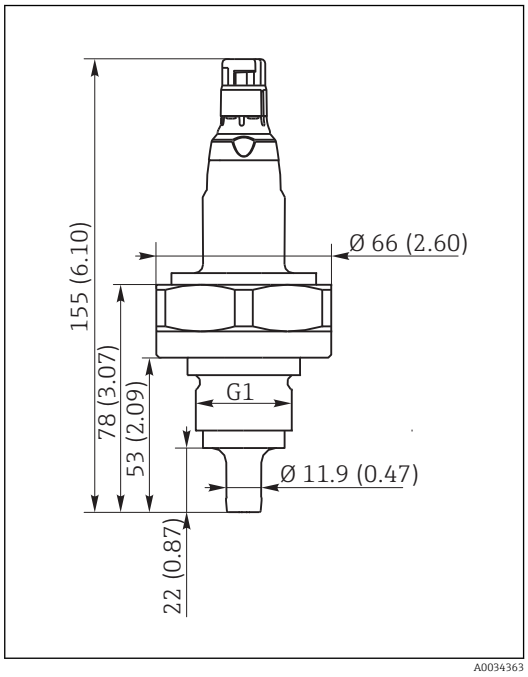

13 G1

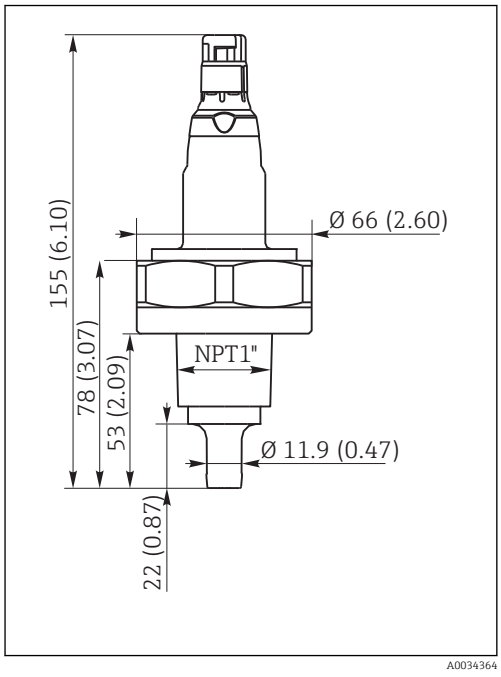

14 NPT1"

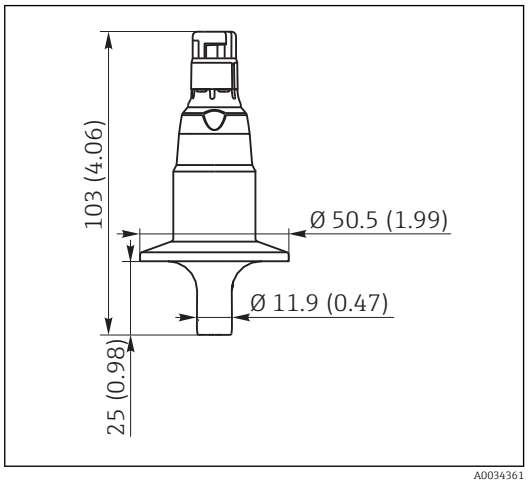

15 Clamp 1.5"

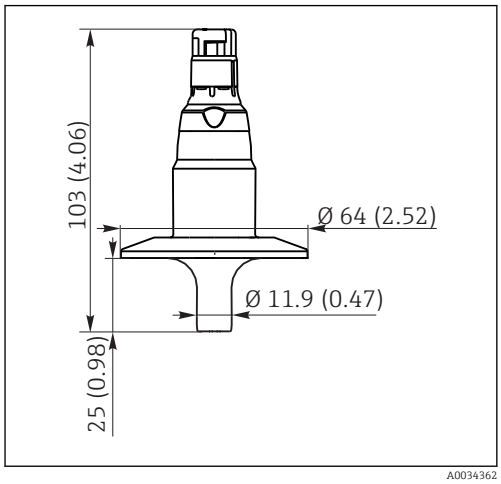

16 Clamp 2"

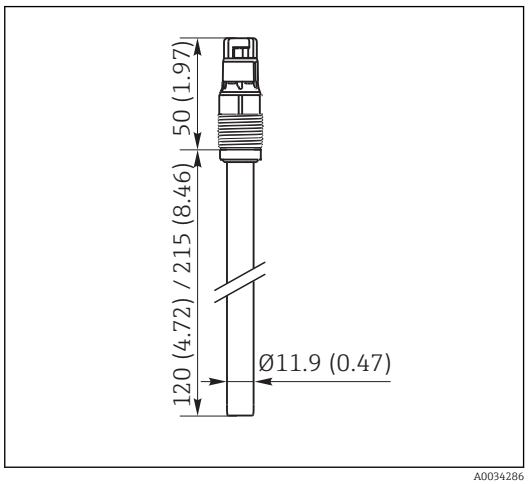

17 Pg 13.5

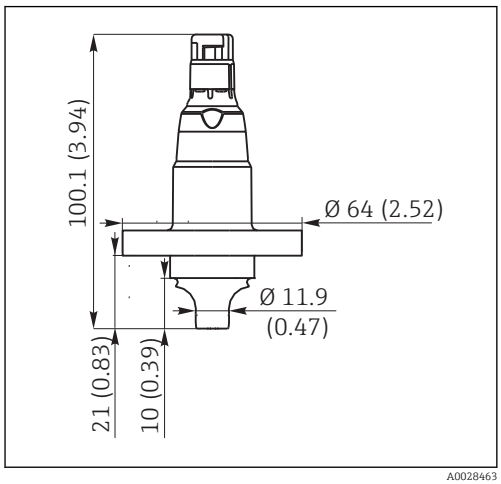

18 BioControl DN 25

All designs are supplied without a process seal.

Weight	Approx. 0.06 to 0.950 kg (0.13 to 2.09 lbs) depending on the version
Materials in contact with the medium	Sensor element: Platinum and ceramic (zirconium oxide) Process connection: Stainless steel 1.4435 (AISI 316L) *Only for CLS82D-**NA* [1] and CLS82D-**NB* [2]:* Seal: EDPM 1) 1. Connection: DN25 standard 2) 2. Connection: DN25 brown
Surface roughness	R_a < 0.38 µm

Certificates and approvals

Ex approval	Ex approvals in conjunction with the Liquiline CM42 transmitter ▪ ATEX II 1G Ex ia IIC T3/T4/T6 Ga ▪ CSA IS/NI Cl.1 Div.1&2 Grp.:A-D ▪ FM IS/NI Cl.1 Div.1&2 Grp.:A-D ▪ NEPSI Ex ia IIC T3/T4/T6 Ga ▪ TIIS Ex ib IIC T4 ▪ EAC Ex, OEx ia IIC T6/T4/T3 GaX All of the Ex versions listed here are identified by an orange-red ring on the plug-in head.
EHEDG	**Hygienic process connections Clamp 1.5", Clamp 2", Varivent F, Varivent N and BioControl DN 25 are certified in accordance with EHEDG, Document 8** Validated as follows: ▪ Cleanability in accordance with EHEDG, Document 2 ▪ Sterilizability in accordance with EHEDG, Document 5 ▪ Bacteria-tightness in accordance with EHEDG, Document 7 **The CLS82D with process connection Pg 13.5 in conjunction with Unifit CPA442 is certified in accordance with EHEDG, Document 8** Validated as follows: Cleanability in accordance with EHEDG, Document 2
FDA	All materials in contact with the product are FDA-compliant.
Quality certificate	Stating the individual cell constant
Pharma CoC (optional)	Certificate of conformity for pharmaceutical requirements, confirms conformity with biological reactivity test USP Class VI, FDA material conformity, TSE-/BSE-free, surface roughness
Inspection certificate in acc. with EN10204-3.1 (optional)	▪ Concerning material traceability Available for all process connections ▪ Concerning surface roughness Available for all hygienic process connections
ASME BPE-2002	Manufactured in accordance with ASME criteria (American Society of Mechanical Engineers)
3-A	Meets the requirements of 3-A Sanitary Standards.
Regulation (EC) No. 1935/2004	Meets the requirements of Regulation (EC) No. 1935/2004

Ordering information

Product page	www.endress.com/cls82d
Product Configurator	On the product page there is a "Configure" button to the right of the product image **Configure**. 1. Click this button. ↳ The Configurator opens in a separate window. 2. Select all the options to configure the device in line with your requirements. ↳ In this way, you receive a valid and complete order code for the device. 3. Export the order code as a PDF or Excel file. To do so, click the appropriate button on the right above the selection window. For many products you also have the option of downloading CAD or 2D drawings of the selected product version. Click the tab for this **CAD** and select the desired file type using picklists.

Accessories

Seals

Only for CLS82D-**NA* [1] and CLS82D-**NB* [2]:
- EPDM seals for CLS82D (x 2; FDA USP Class VI); Order No. 71307106
- FKM (Viton®) seals for CLS82D (x 2; FDA USP Class VI); Order No. 71307105
- Silicone seals for CLS82D (x 2, FDA USP Class VI); Order No. 71307107

Welding socket

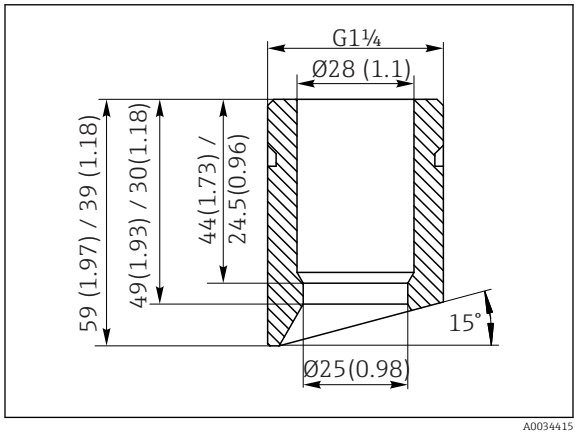

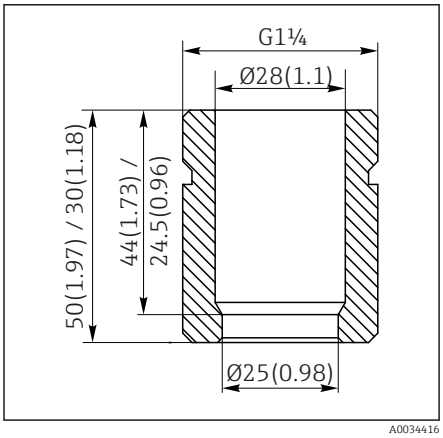

- Safety welding socket DN25, straight, stainless steel 1.4435, L=30; Order No. 51508051
  Only for CLS82D-**NA* [1]
- Safety welding socket DN25, angled, stainless steel 1.4435, L=30/40; Order No. 51508052
  Only for CLS82D-**NA* [1]
- Safety welding socket DN25, straight, stainless steel 1.4435, L=50; Order No. 51508049
  Only for CLS82D-**NB* [2]
- Safety welding socket DN25, angled, stainless steel 1.4435, L=50/60; Order No. 51508050
  Only for CLS82D-**NB* [2]

Existing standard welding sockets (for CPA440 / CPA441 / CPA460), Order Nos. 50005192 and 50028446, are also suitable for sensor CLS82D.

Connection

CYK10 Memosens data cable
- For digital sensors with Memosens technology
- Product Configurator on the product page: www.endress.com/cyk10

Technical Information TI00118C

Memosens data cable CYK11
- Extension cable for digital sensors with Memosens protocol
- Product Configurator on the product page: www.endress.com/cyk11

Technical Information TI00118C

1) Process connection: DN25 standard
2) Process connection: DN25 brown

Calibration solutions	**Conductivity calibration solutions CLY11** Precision solutions referenced to SRM (Standard Reference Material) by NIST for qualified calibration of conductivity measuring systems in accordance with ISO 9000 ▪ CLY11-A, 74 µS/cm (reference temperature 25 °C (77 °F)), 500 ml (16.9 fl.oz) Order No. 50081902 ▪ CLY11-B, 149.6 µS/cm (reference temperature 25 °C (77 °F)), 500 ml (16.9 fl.oz) Order No. 50081903 ▪ CLY11-C, 1.406 mS/cm (reference temperature 25 °C (77 °F)), 500 ml (16.9 fl.oz) Order No. 50081904 ▪ CLY11-D, 12.64 mS/cm (reference temperature 25 °C (77 °F)), 500 ml (16.9 fl.oz) Order No. 50081905 ▪ CLY11-E, 107.00 mS/cm (reference temperature 25 °C (77 °F)), 500 ml (16.9 fl.oz) Order No. 50081906 Technical Information TI00162C
Calibration set	**Conducal CLY421** ▪ Conductivity calibration set (case) for ultrapure water applications ▪ Complete, factory-calibrated measuring system with certificate, traceable to SRM by NIST and PTB, for comparison measurement in ultrapure water up to max. 20 µS/cm ▪ Product Configurator on the product page: www.endress.com/cly421 Technical Information TI00496C/07/EN Recalibration ▪ The conductivity calibration set must be calibrated regularly onsite at the manufacturer's depending on the frequency of use and operating conditions. ▪ Recommended period: 1 year

www.addresses.endress.com

Endress+Hauser

People for Process Automation